PULLTARPS®

A Safe Fleet Brand

® Copyright 2019

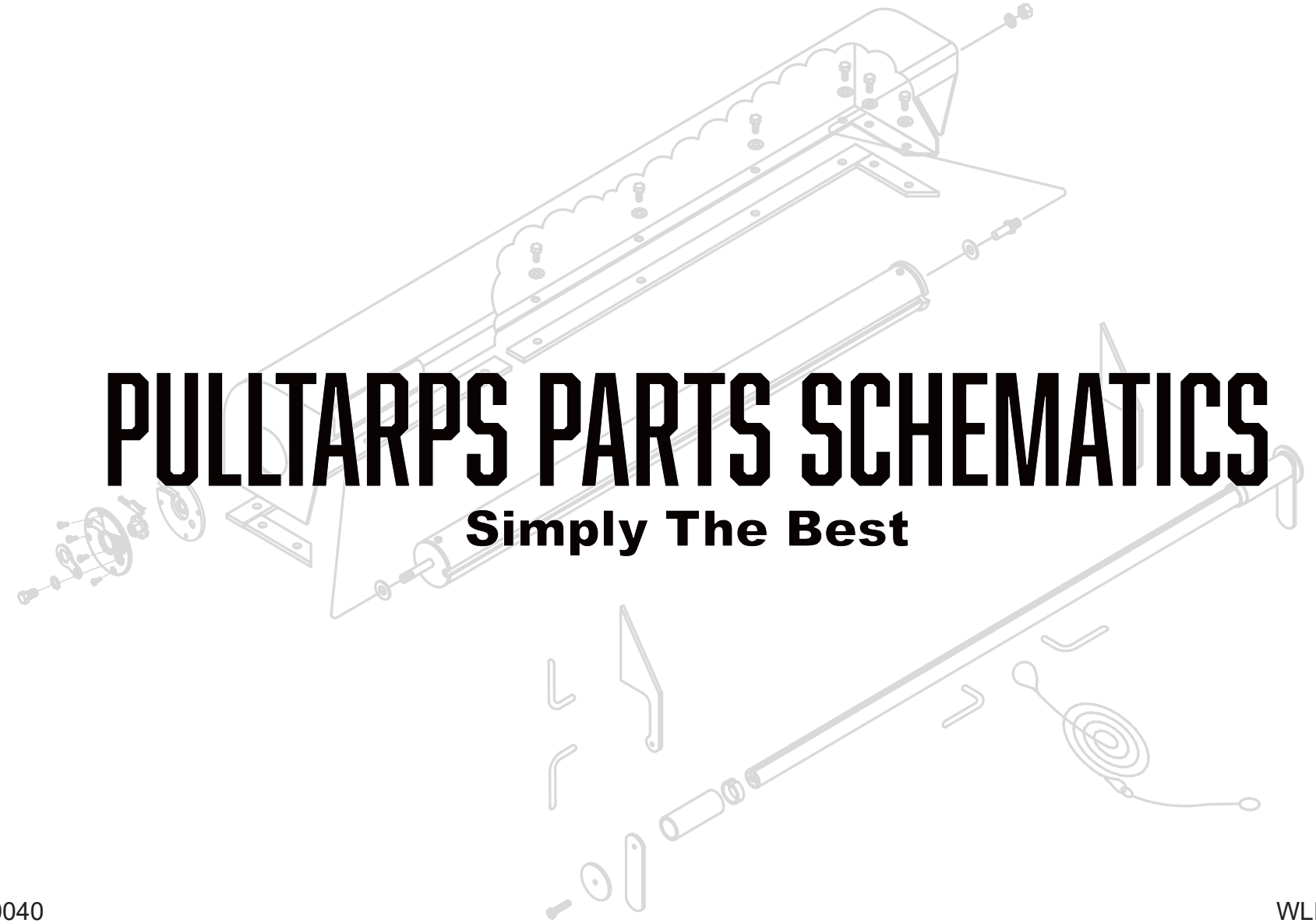

PULLTARPS PARTS SCHEMATICS

Simply The Best

608-0040

WLH 08/21/19

PULLTARPS®

A Safe Fleet Brand

Table of Contents

Semi-Automatic Systems

Open 6000M #101-0215 2
Open 9000M #105-0215 3
Aluminator™ 7000M #103-0215 4
Aluminator™ 8500M #117-0215 5
Steel Protector™ #106-0215 6
Steel Protector +™ #116-0215 7
X-Pando™ (Adjustable) #116-3027, 116-3017 8
X-Pando™ (Pre-Adjusted) #116-3028, 116-3018 9
SuperShield™ 8500M #107-0215 10
SuperShield™ 9500M #108-0215 11
Open 9000M #110-0215 12
SuperShield™ 9500E #111-0215 13

Semi-Automatic System Options

Manual Steel Arm Retrofit Kit #113-2212 15
Steel Manual Arm (Complete Kits) #113-2214, 113-2215 16
Manual Aluminum Arm Retrofit Kit #113-2222 17
Aluminum Manual Arm Kit #113-2224, #113-2225 18
Optional Load Climber #501-0901 19
Optional Asphalt Load Climber #501-0913 20

Automatic Systems

Open 9000E #201-0215 22
Aluminator™ 7000E #204-0215 23
Aluminator™ 8500E #234-0215 24
Steel Protector™ #208-0215 25
Steel Protector +™ #218-0215 26
SuperShield™ 9500E #210-0215 27

Automatic Systems (Continued)

X-Pando (Adjustable) #218-0215 28
High Mnt. Ext. Reach Arm System #501-1766, 501-1767 29
EZ-Mount 4 Spring Arm System #501-1768, 501-1769 30
4 Spring Enclosed Housing Assembly Right #501-2204 & Left #501-2203 31
Rear Transfer Inside Arm System #501-1780 32
High Mount Arm System #501-1781 33
Inside Transfer / High Mount 3 Spring Housing Assembly #501-2205, 501-2206 34
Steel Arms to 22’ #501-0756, 501-0755 35
Steel Arms to 22’ #501-1703, 501-1704 36
4 Spring Housing Assembly #501-2207, 501-2208 37
Single Spring Pivots with Steel Arms #501-0713, 501-1763 38
Single Spring Pivots w/Aluminum Arms #501-0714, 501-0731, 501-1764, 501-1765 (No Wire) #501-0764, 501-0765, 501-0785, 501-0786 (With Wire 90’ & 100’) 39
Single Spring Housing Assembly #501-1101 (Driver-Shown), #501-1102 (Pass.-Opposite) 40
34” Steel Offset 4-Spring Housing #501-1203, 501-1204 41

Semi-Automatic & Automatic Options

Tarp Tamer # 501-0701 43
S8 Roller Conversion #501-070X 44
Tarp Tamer Bow to 21’ Steel Straight #501-1800, 501-1801 45
Tarp Tamer Bow to 21’ Alum. Straight #501-1802, 501-1803 46
80” Wind Tray Kit / Aluminator 8500 Housing - #501-1030 (Shown). Width Options: #501-1031 (84”), #501-1032 (87”), #501-1033 (89”), #501-1034 (93”), 501-1035 (96”) & 501-1036 (100”) 47

Dual Stage Tower / Automatic & Semi-Automatic
Dual Stage Electric Tower #513-0014..... 49
Dual Stage EDU Tower #513-0020..... 50
Dual Stage Pulltarp Tower #513-0019..... 51
SuperShield™ 9500E 100” Tower Assembly with Tray #513-0081..... 52
Open 9000E 102” Tower Assembly with Tray #513-0017..... 53
SuperShield™ 9500M 100” Tower Assembly with Tray #513-0082 54
Open 9000M 102” Tower Assembly with Tray - #513-0073 55
Tower Tray Hardware Kit #501-0687 56
105” Pullrod with Hardware #501-0420 57

Bunker Systems
Bunker Open 9000M #105-1830 (Width of 183”)..... 59
Bunker Open 9000M #105-2880 (Width of 288”)..... 60

Smart Switch
Smart Switch with Cab / External Switch - 24 Volt #501-9933... 62
Smart Switch with External Switch - 24 Volt #501-9949..... 63
Smart Switch with Cab / External Switch-12 Volt #501-9952... 64
Smart Switch with External Switch-12 Volt #501-9953..... 65
Smart Switch Basic Kit #514-0114..... 66
Deluxe High Amp Switch Kit - 12 Volt #514-0139..... 67

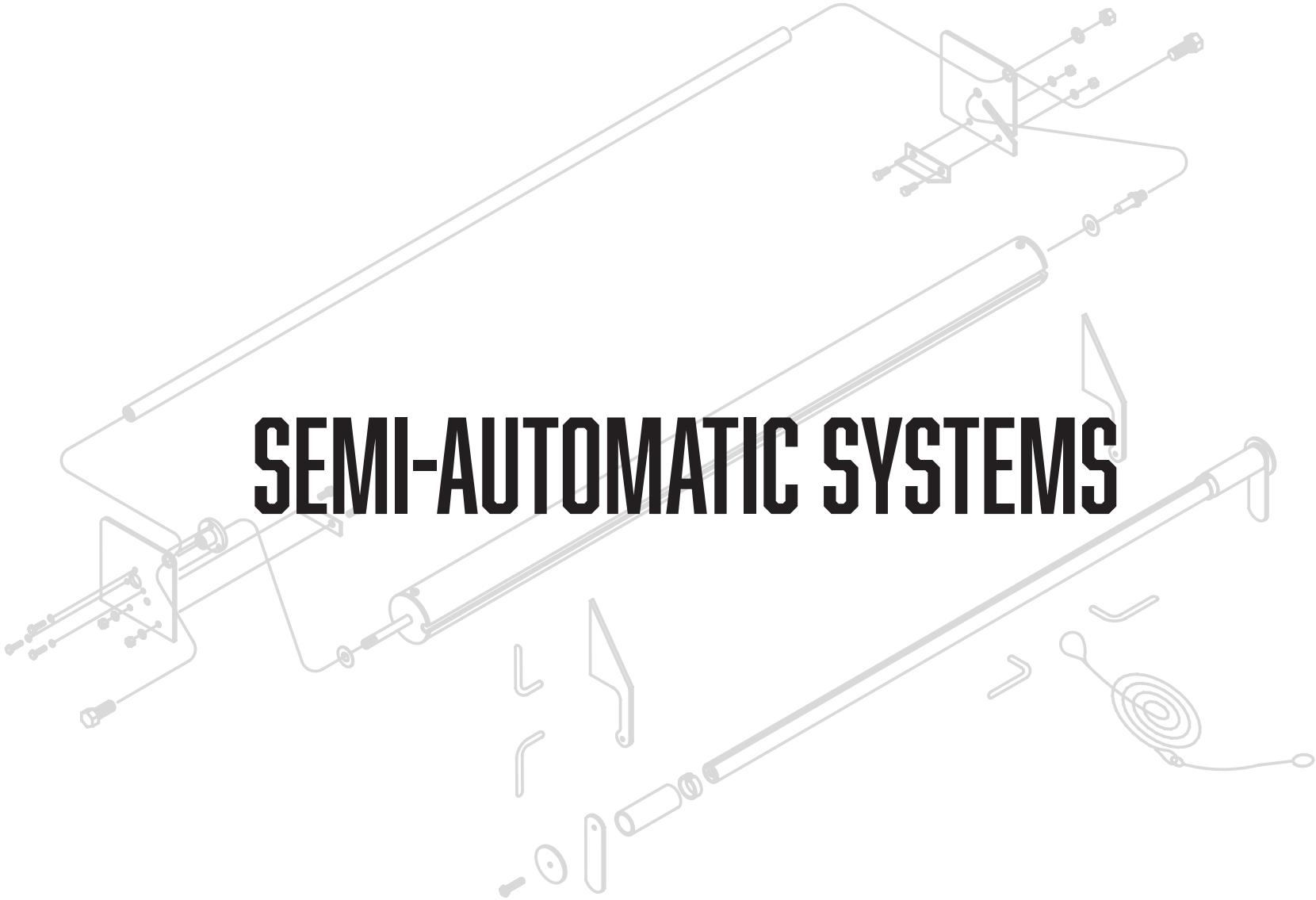

SEMI-AUTOMATIC SYSTEMS

Open 6000M #101-0215

(Widths of 80, 84, 87, 89, 93, 96, 100")

ITEM	PART #	DESCRIPTION	QTY
1	501-13XX	Roller Tube Assy 80,84,87,89,93,96,100"	1
2	501-152X	Open System Mount Brkt. (Specify Steel or Aluminum - Left)	1
3	501-152X	Open System Mount Brkt. (Specify Steel or Aluminum - Right)	1
4	505-2502	1/4" Flat Washer USS	4
5	504-3103	5/16"-18 Nyloc Nut	4
6	503-3104	5/16"-18 x 3/4"lg. Carriage Bolt	4
7	501-0632	System End Plate Stud Kit	1
8	501-0203	6" Open End Plate, (Drvr.)	1
9	501-0204	6" Open End Plate, (Pass.)	1
10	503-2503	1/4" - 20 x 1/2"lg. HHCS Bolt	3
11	505-2503	1/4" Lock Washer	3
12	501-980X	Spacer Rod 7/8" (Optional)	1
13	503-7501	3/4" - 10 x 1"lg. HHCS Bolt (Optional)	2
14	501-0804	Steel Spring Shaft Anchor	1
15	505-5002	Nylon Washer	1

REV. 10/12/16 WLH

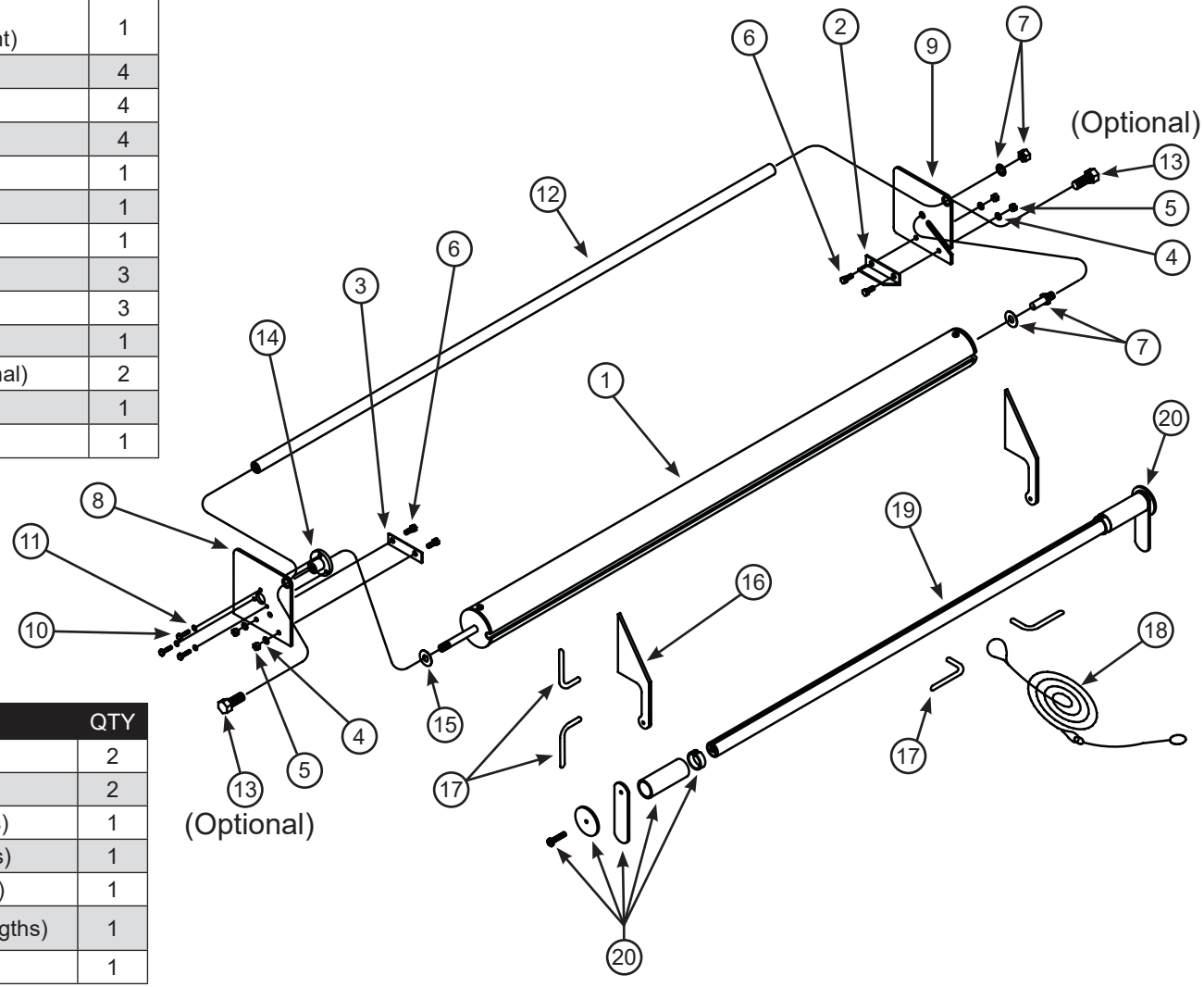

Pullrod Hardware

ITEM	PART #	DESCRIPTION	QTY
16	501-0301	Tarp Return Ramps (Steel)	2
--	501-0302	Tarp Return Ramps (Alum.)	2
17	501-0621	Rope Storage Kits (4 Steel Hooks)	1
--	501-0608	Rope Storage Kits (4 Alum. Hooks)	1
18	517-10XX	Pull Rope (20, 25, 30, 35, 40, 50')	1
19	Determined by Length	Pullrod (85, 91, 93, 96, 100, 105" Lengths)	1
20	501-0612	Pullrod Hardware Kit	1

Open 9000M #105-0215

(Widths of 80, 84, 87, 89, 93, 96, 100")

ITEM	PART #	DESCRIPTION	QTY
1	501-13XX	Roller Tube Assy 80,84,87,89,93,96,100"	1
2	501-152X	Open System Mount Brkt. (Specify Steel or Aluminum)	2
3	505-2502	1/4" Flat Washer USS	6
4	504-3103	5/16"-18 Nyloc Nut	6
5	503-3104	5/16"-18 x 3/4"lg. Carriage Bolt	6
6	501-0632	System End Plate Stud Kit	1
7	501-0219	9" Open End Plate, (Drvr.)	1
8	501-0220	9" Open End Plate, (Pass.)	1
9	503-2503	1/4" - 20 x 1/2"lg. HHCS Bolt	3
10	505-2503	1/4" Lock Washer	3
11	501-980X	Spacer Rod 7/8" (Optional)	1
12	503-7501	3/4" - 10 x 1"lg. HHCS Bolt (Optional)	2
13	501-0804	Steel Spring Shaft Anchor	1
14	505-5002	Nylon Washer	1

REV. 10/12/16 WLH

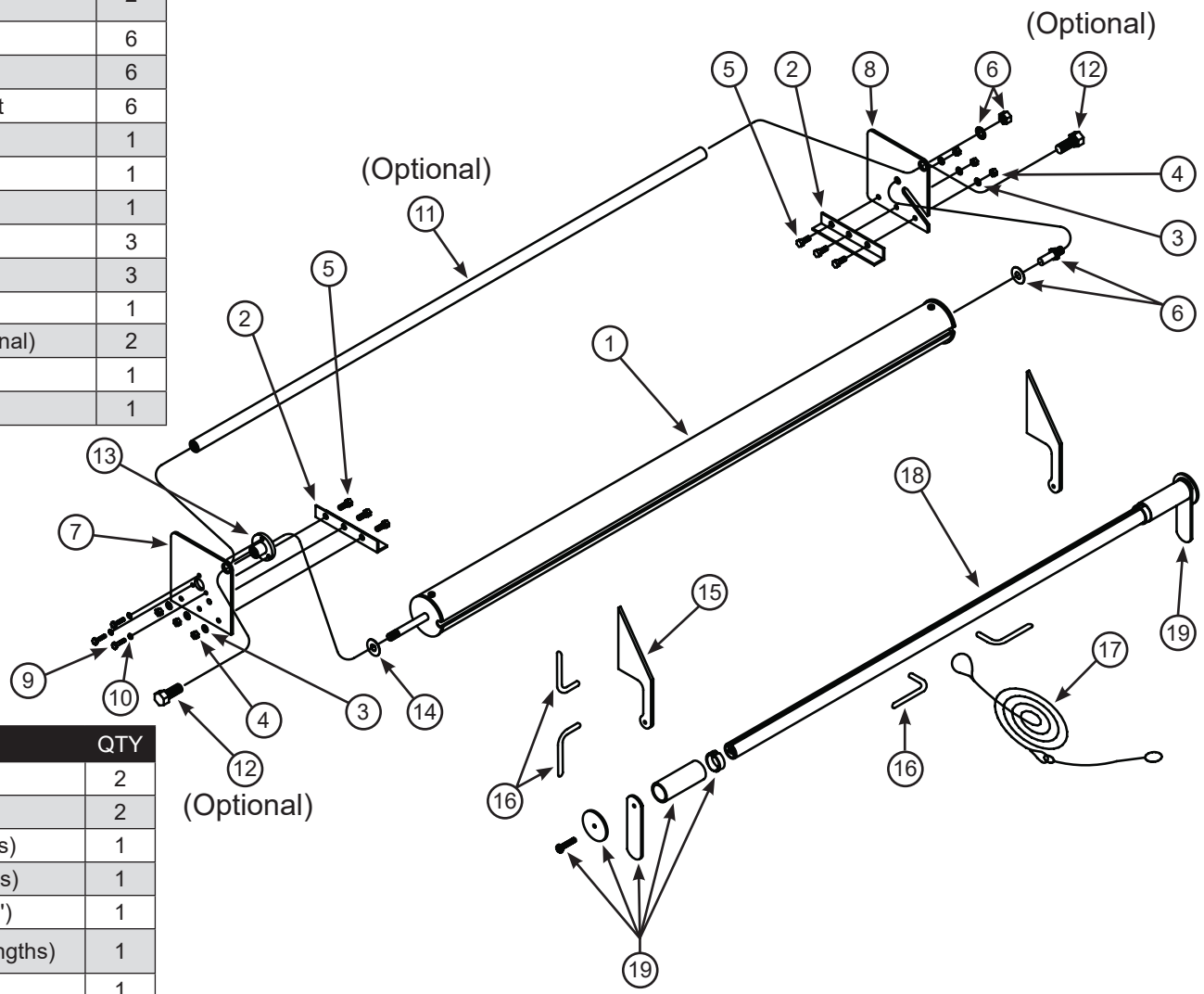

Pullrod Hardware

ITEM	PART #	DESCRIPTION	QTY
15	501-0301	Tarp Return Ramps (Steel)	2
--	501-0302	Tarp Return Ramps (Alum.)	2
16	501-0621	Rope Storage Kits (4 Steel Hooks)	1
--	501-0608	Rope Storage Kits (4 Alum. Hooks)	1
17	517-10XX	Pull Rope (20, 25, 30, 35, 40, 50')	1
18	Determined by Length	Pullrod (85, 91, 93, 96, 100, 105" Lengths)	1
19	501-0612	Pullrod Hardware Kit	1

Aluminator™ 7000M #103-0215

(Widths of 80, 84, 87, 89, 93, 96, 100")

ITEM	PART #	DESCRIPTION	QTY
1	501-10XX	Alum. Wind Guard 80, 84, 87, 89, 93, 96, 100"	1
2	501-13XX	Alum. Roller Tube Assy 80,84,87,89,93,96,100"	1
3	501-15XX	Mounting Bar-Steel 40, 42, 43.5, 44.5, 46.5, 48, 50"	2
4	501-0207	7.5" Aluminum End Plate (Drvr.)	1
5	501-0208	7.5" Aluminum End Plate (Pass.)	1
6	505-5002	Nylon Washer	1
7	505-2503	1/4" Lock Washer	3
8	503-2503	1/4" - 20 x 1/2"lg. HHCS Bolt	3
9	501-0804	Steel Spring Shaft Anchor	1
10	505-2502	1/4" Flat Washer USS	12
11	501-150X	5" Mounting Bar (Specify Steel or Aluminum)	2
12	503-3104	5/16" - 18 x 3/4"lg. Carriage Bolt	4
13	501-0805	Universal Bolt In Stud Kit	1
14	504-3103	5/16" - 18 Nyloc Nut	4
15	505-3102	5/16" Lock Washer	12
16	503-3101	5/16" - 18 x 1/2"lg. HHCS Bolt	8
17	503-3102	5/16" - 18 x 1"lg. HHCS Bolt	4

REV. 12/13/16 WLH

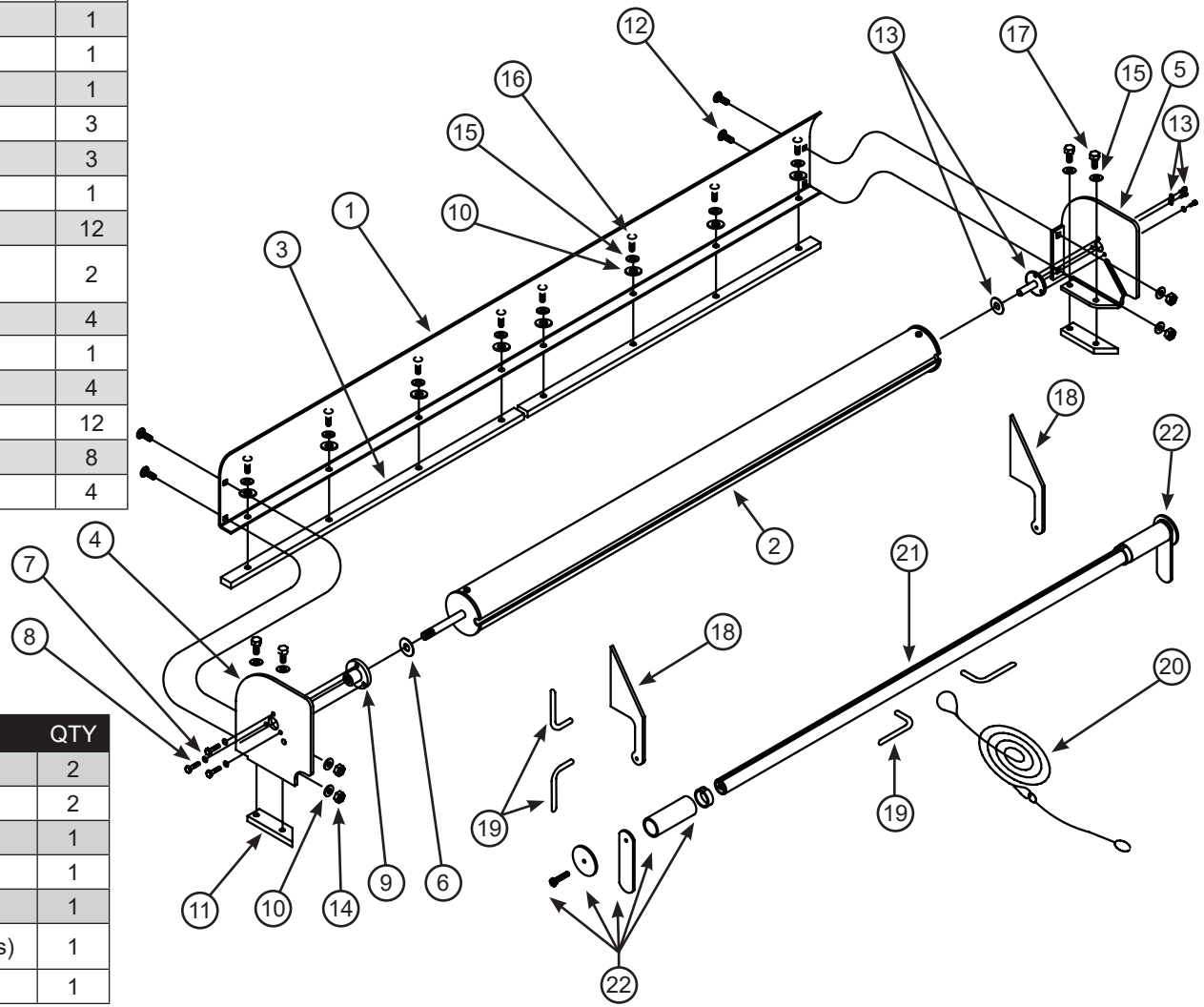

Pullrod Hardware

ITEM	PART #	DESCRIPTION	QTY
18	501-0301	Tarp Return Ramps (Steel)	2
--	501-0302	Tarp Return Ramps (Alum.)	2
19	501-0621	Rope Storage Kits (4 Steel Hooks)	1
--	501-0608	Rope Storage Kits (4 Alum. Hooks)	1
20	517-10XX	Pull Rope (20, 25, 30, 35, 40, 50')	1
21	Determined by Length	Pullrod (85, 91, 93, 96, 100, 105" Lengths)	1
22	501-0612	Pullrod Hardware Kit	1

Aluminator™ 8500M #117-0215

(Widths of 80, 84, 87, 89, 93, 96, 100”)

ITEM	PART #	DESCRIPTION	QTY
1	501-0181	100” Aluminum 8.5 Housing	1
2	501-0647	System End Plate Ratchet	1
3	501-0805	Universal Bolt in Stud	1
4	501-1056	8.5” Ratchet Aluminum End	1
5	501-1057	8.5” Aluminum End Plate Right	1
6	501-1307	100” Spring Roller	1
7	501-1506	6” Steel Mounting Bar	2
8	501-1513	50” Mounting Bar - Steel	2
9	501-9934	Galvanized Steel Bracket	2
10	503-2503	1/4”-20 x 1/2” HHD Bolt	3
11	503-3101	5/16” - 18 x 1/2” Hex Bolt	12
12	503-3104	5/16” - 18 x 3/4” Carriage Bolt	10
13	504-3103	5/16” - 18 Nylock Nut Steel	10
14	505-2502	1/4” USS Washer 5/16”	18
15	505-2503	1/4” Lock Washer - Plated	3
16	505-3102	5/16” Lock Washer	12
17	505-5002	Washer Nylon .5ID x 1.25OD	2
18	506-9937	10-32 x 5/8” Philips Pan	4

REV. 04/18/19 WLH

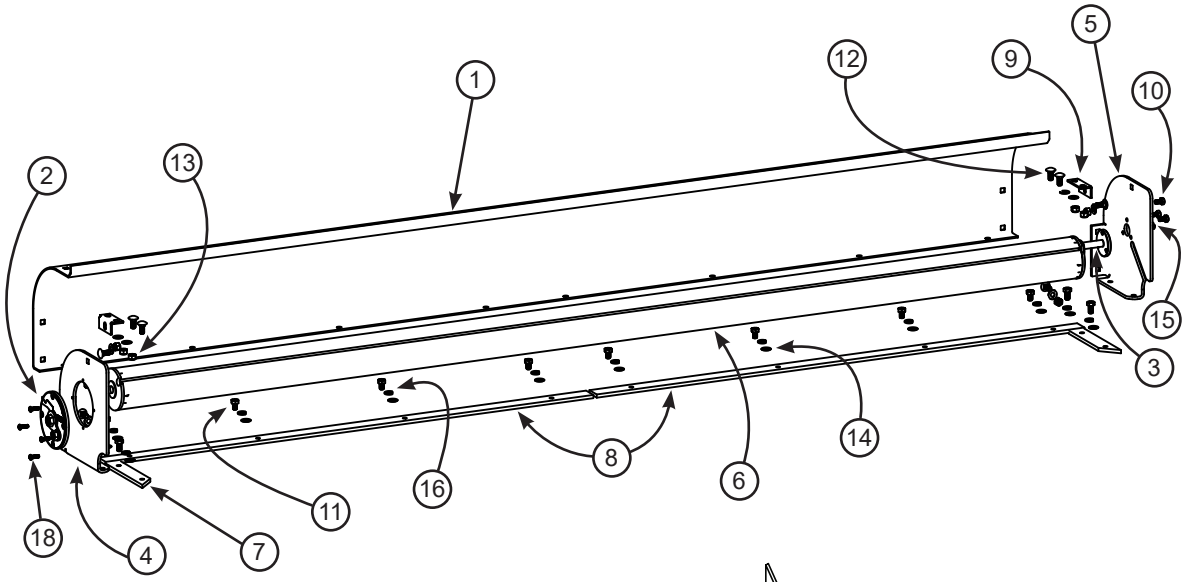

ITEM	PART #	DESCRIPTION	QTY
19	501-0301	Tarp Return Ramps (Steel)	2
--	501-0302	Tarp Return Ramps (Alum.)	2
20	501-0623	Rope Storage Kits (4 Steel Hooks)	1
21	517-10XX	Pull Rope (20, 25, 30, 35, 40, 50')	1
22	Determined by Length	Pullrod (85, 91, 93, 96, 100, 105")	1
23	501-0612	Pullrod Hardware Kit	1

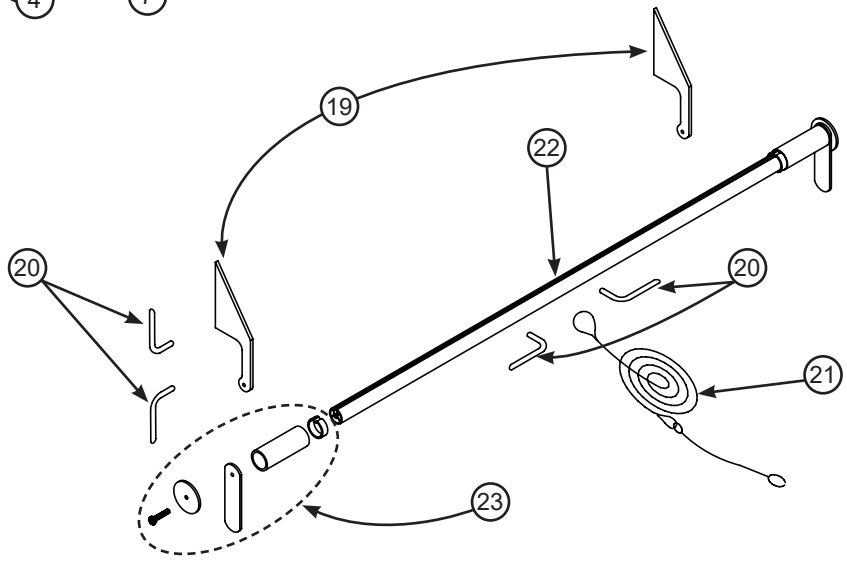

Steel Protector™ #106-0215

(Widths of 80, 84, 87, 89, 93, 96, 100")

ITEM	PART #	DESCRIPTION	QTY
1	501-010X	Galv. Steel Protector Housing 80, 84, 87, 89, 93, 96, 100"	1
2	501-130X	Roller Assembly 80, 84, 87, 89, 93, 96, 100"	1
3	501-0138	48" x 5-1/2" Galv. Insert	1
4	501-152X	System Mount Bracket (Specify Steel or Aluminum - Left)	1
5	501-152X	System Mount Bracket (Specify Steel or Aluminum - Right)	1
6	501-0254	Passenger Side Plate for "N" System	1
7	501-0253	Driver Side Plate for "N" System	1
8	501-0633	Universal Bolt in Stud Kit	1
9	501-0804	Steel Spring Shaft Anchor	1
10	505-5002	Nylon Washer	1
11	503-2505	1/4" - 20 x 3/4"lg. Carriage Bolt	8
12	505-2502	1/4" Flat Washer USS	24
13	504-2506	1/4" - 20 Nyloc Nut (Thin)	12
14	503-3104	5/16" - 18 x 3/4"lg. Carriage Bolt	4
15	504-3103	5/16" - 18 Nyloc Nut	4
16	503-2503	1/4" - 20 x 1/2"lg. HHCS Bolt	3
17	505-2503	1/4" Lock Washer	3
18	504-2503	1/4" - 20 Nyloc Nut	8
19	503-2501	1/4" - 20 x 1/2"lg. Carriage Bolt	12
20	501-06XX	Steel Protector System Hardware (Specify Steel or Aluminum)	1

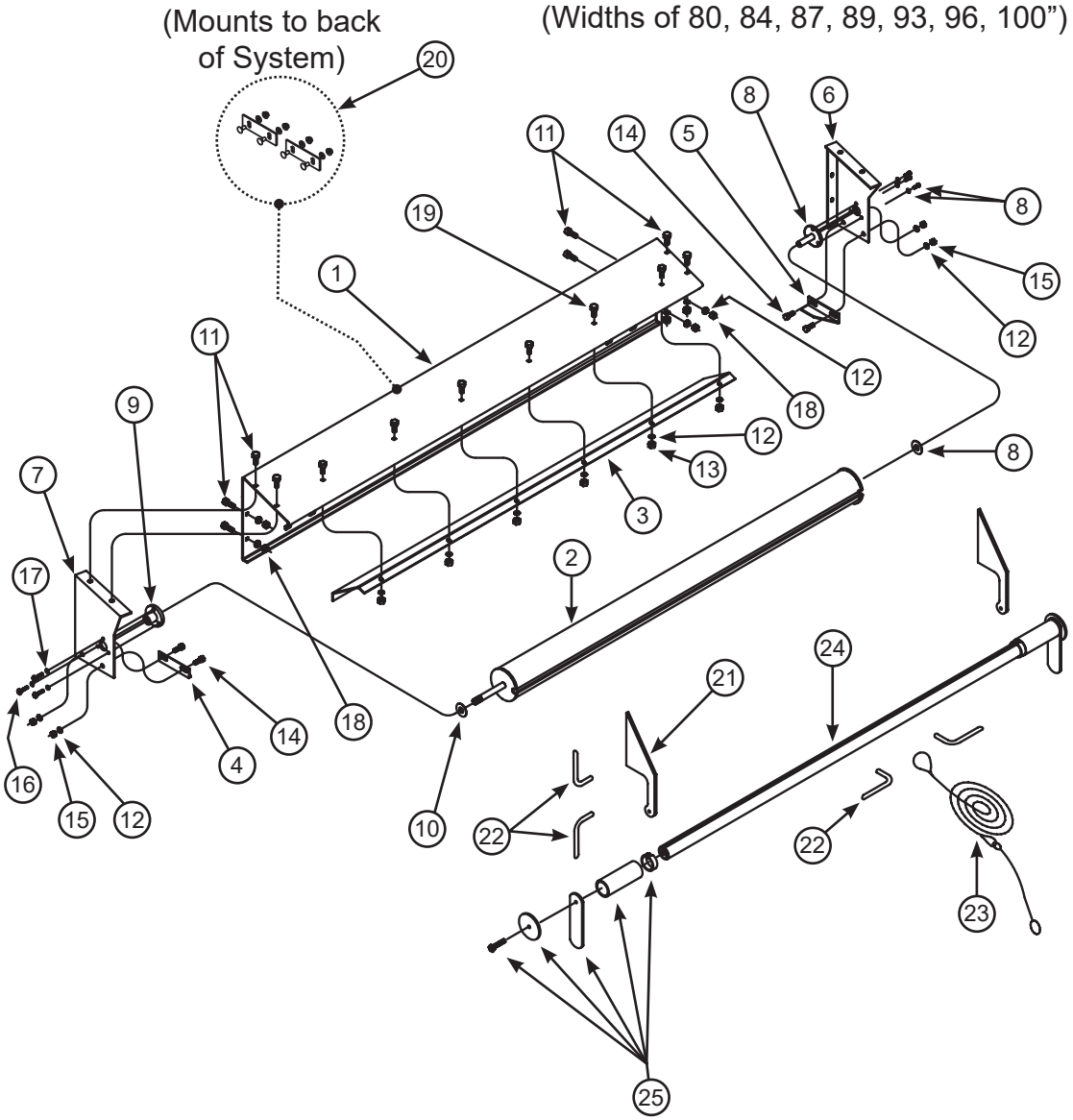

Pullrod Hardware

REV. 11/15/16 WLH

ITEM	PART #	DESCRIPTION	QTY
21	501-0301	Tarp Return Ramps (Steel)	2
--	501-0302	Tarp Return Ramps (Alum.)	2
22	501-0621	Rope Storage Kits (4 Steel Hooks)	1
--	501-0608	Rope Storage Kits (4 Alum. Hooks)	1
23	517-10XX	Pull Rope (20, 25, 30, 35, 40, 50')	1
24	Determined by Length	Pullrod (85, 91, 93, 96, 100, 105" Lengths)	1
25	501-0612	Pullrod Hardware Kit	1

Steel Protector +™ #116-0215

(Widths of 80, 84, 87, 89, 93, 96, 100")

ITEM	PART #	DESCRIPTION	QTY
1	501-0138	Galvanized Insert	1
2	501-018X to 019X	Galv. Steel Protector + Housing	1
3	501-0280	Protector + Ratchet End Plate	1
4	501-0281	Protector + End Plate Passenger	1
5	501-0801	System End Plate Stud 2.4"	1
6	501-0647	System End Plate Ratchet	1
7	501-1505	6" Large Steel Mounting Bar	2
---	501-1506	6" Large Aluminum Mounting Bar	---
8	501-1520	50" Mounting Bar Aluminum	2
---	501-1513	50" Mounting Bar Steel	---
9	501-130X	Spring Roller Tube	1
10	503-2501	1/4" - 20 x 1/2" USS Carriage Bolt	12
11	503-2505	1/4" - 20 x 3/4" USS Carriage Bolt	10
12	503-3101	5/16" - 18 x 1/2" Hex Bolt	12
13	504-2503	1/4" - 20 USS Nylock Nut	10
14	504-2506	1/4" Hex Lock Nut "Thin" L/N Steel Zinc	12
15	504-5001	1/2" Crimp Nut	1
16	505-2502	1/4" USS Washer 5/16" Hole	35
17	505-3102	5/16" Lock Washer	15
18	505-5001	1/2" AN Washer 1/16" Thick	1
19	505-5002	Washer Nylon 0.5ID X	2
20	506-9937	10-31 x 5/8" Philips Pan	4

REV. 04/18/19 WLH

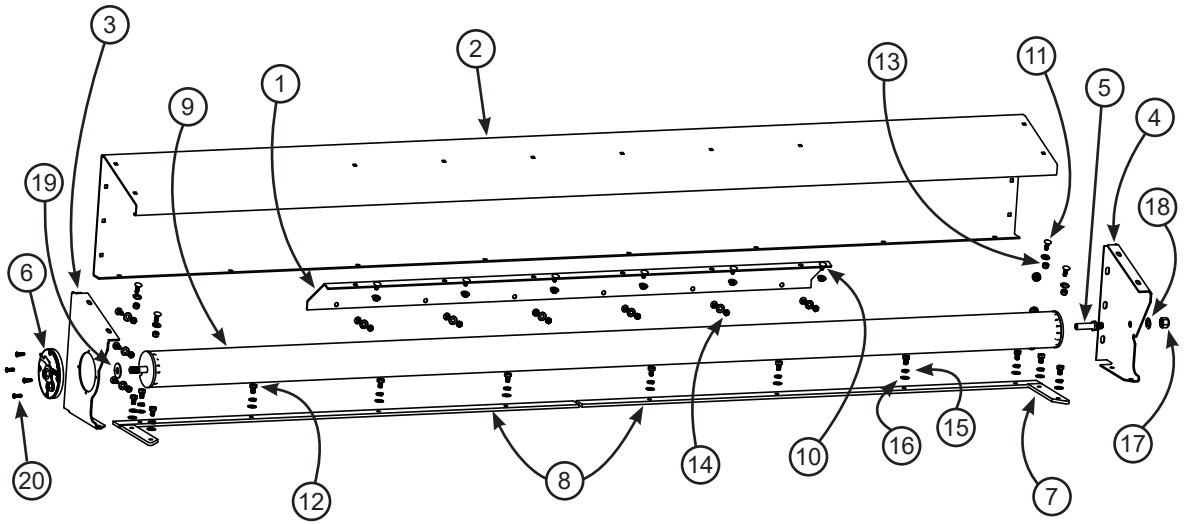

ITEM	PART #	DESCRIPTION	QTY
20	501-0301	Tarp Return Ramps (Steel)	2
--	501-0302	Tarp Return Ramps (Alum.)	2
21	501-0623	Rope Storage Kits (4 Steel Hooks)	1
22	517-10XX	Pull Rope (20, 25, 30, 35, 40, 50')	1
23	Determined by Length	Pullrod (85, 91, 93, 96, 100, 105")	1
24	501-0612	Pullrod Hardware Kit	1

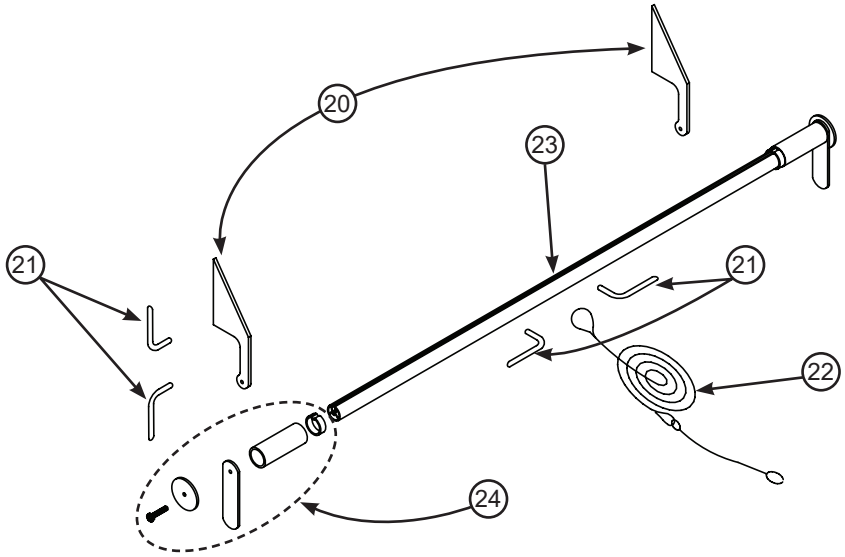

X-Pando™ (Adjustable) #116-3027, 116-3017

(Widths of 78” - 100”)

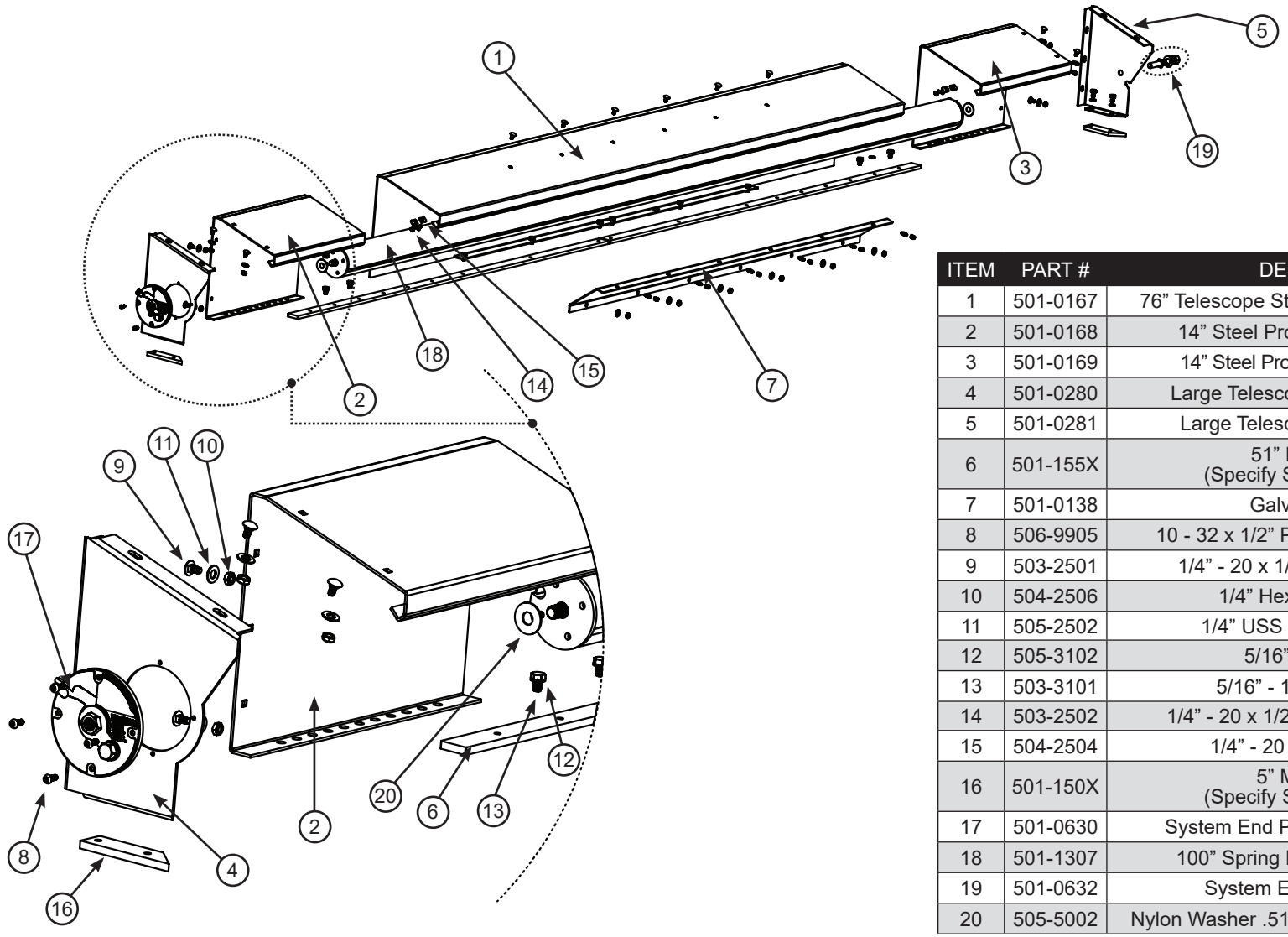

ITEM	PART #	DESCRIPTION	QTY
1	501-0167	76” Telescope Steel Protector Center Hsg.	1
2	501-0168	14” Steel Protector Adj. End (Left)	1
3	501-0169	14” Steel Protector Adj. End (Right)	1
4	501-0280	Large Telescope Ratchet End Plate	1
5	501-0281	Large Telescope End Plate Pass.	1
6	501-155X	51” Mounting Bar (Specify Steel or Aluminum)	2
7	501-0138	Galvanized Insert	1
8	506-9905	10 - 32 x 1/2” Phillips Pan Head Screw	4
9	503-2501	1/4” - 20 x 1/2” USS Carriage Bolt	22
10	504-2506	1/4” Hex Lock Nut “Thin”	22
11	505-2502	1/4” USS Washer 5/16” Hole	22
12	505-3102	5/16” Lock Washer	14
13	503-3101	5/16” - 18 x 1/2” Hex Bolt	14
14	503-2502	1/4” - 20 x 1/2” SS Button HD Screw	4
15	504-2504	1/4” - 20 Weld Nut - Single	4
16	501-150X	5” Mounting Bar (Specify Steel or Aluminum)	2
17	501-0630	System End Plate Ratchet Assembly	1
18	501-1307	100” Spring Roller Tube Assembly	1
19	501-0632	System End Plate Stud 2.4”	1
20	505-5002	Nylon Washer .51 ID x 1.25 OD x .063 Thick	2

REV. 04/18/19 WLH

X-Pando™ (Pre-Adjusted) #116-3028, 116-3018

(Set to Size)

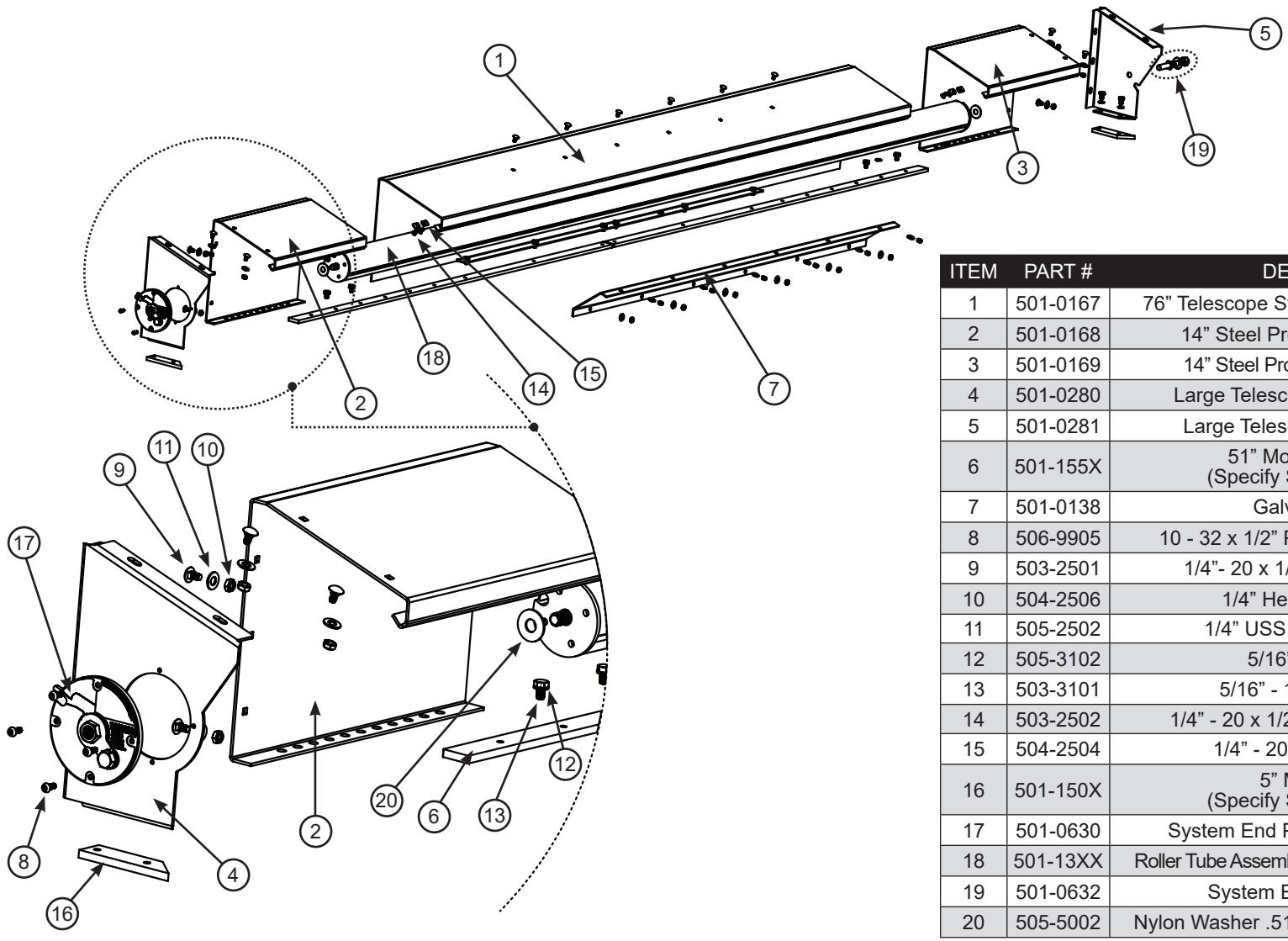

ITEM	PART #	DESCRIPTION	QTY
1	501-0167	76” Telescope Steel Protector Center Hsg.	1
2	501-0168	14” Steel Protector Adj. End (Left)	1
3	501-0169	14” Steel Protector Adj. End (Right)	1
4	501-0280	Large Telescope Ratchet End Plate	1
5	501-0281	Large Telescope End Plate Pass.	1
6	501-155X	51” Mounting Bar-Steel (Specify Steel or Aluminum)	2
7	501-0138	Galvanized Insert	1
8	506-9905	10 - 32 x 1/2” Phillips Pan Head Screw	4
9	503-2501	1/4”- 20 x 1/2” USS Carriage Bolt	22
10	504-2506	1/4” Hex Lock Nut “Thin”	22
11	505-2502	1/4” USS Washer 5/16” Hole	22
12	505-3102	5/16” Lock Washer	14
13	503-3101	5/16” - 18 x 1/2” Hex Bolt	14
14	503-2502	1/4” - 20 x 1/2” SS Button HD Screw	4
15	504-2504	1/4” - 20 Weld Nut - Single	4
16	501-150X	5” Mounting Bar (Specify Steel or Aluminum)	2
17	501-0630	System End Plate Ratchet Assembly	1
18	501-13XX	Roller Tube Assembly 80, 84, 87, 89, 93, 96, 100”	1
19	501-0632	System End Plate Stud 2.4”	1
20	505-5002	Nylon Washer .51 ID x 1.25 OD x .063 Thick	2

REV. 04/04/19 WLH

SuperShield™ 8500M #107-0215

(Widths of 80, 84, 87, 89, 93, 96, 100")

ITEM	PART #	DESCRIPTION	QTY
1	501-01XX	8.5" Super Shield Housing 80, 84, 87, 89, 93, 96, 100"	1
2	501-13XX	Roller Tube Assy 80,84,87,89,93,96,100"	1
3	501-15XX	Mounting Bar 40, 42, 43.5, 44.5, 46.5, 48, 50" (Specify Steel or Aluminum)	2
4	501-150X	Small Steel Mounting Bar (Specify Steel or Aluminum)	2
5	501-0809	Ratchet Housing	1
6	501-0806	Ratchet Cover	1
7	501-0825	Ratchet Kit	1
8	501-0630	Ratchet Assembly	1
9	501-0632	System End Plate Stud Kit	1
10	505-5002	Nylon Washer	1
11	503-3101	5/16" - 18 x 1/2"lg. HHCS Bolt	10
12	505-3102	5/16" Lock Washer	10
13	506-9905	#10 - 32 x 1/2"lg. Phillips Pan Screw	4
14	607-0061	Pulltarps Decal	1

REV. 10/12/16 WLH

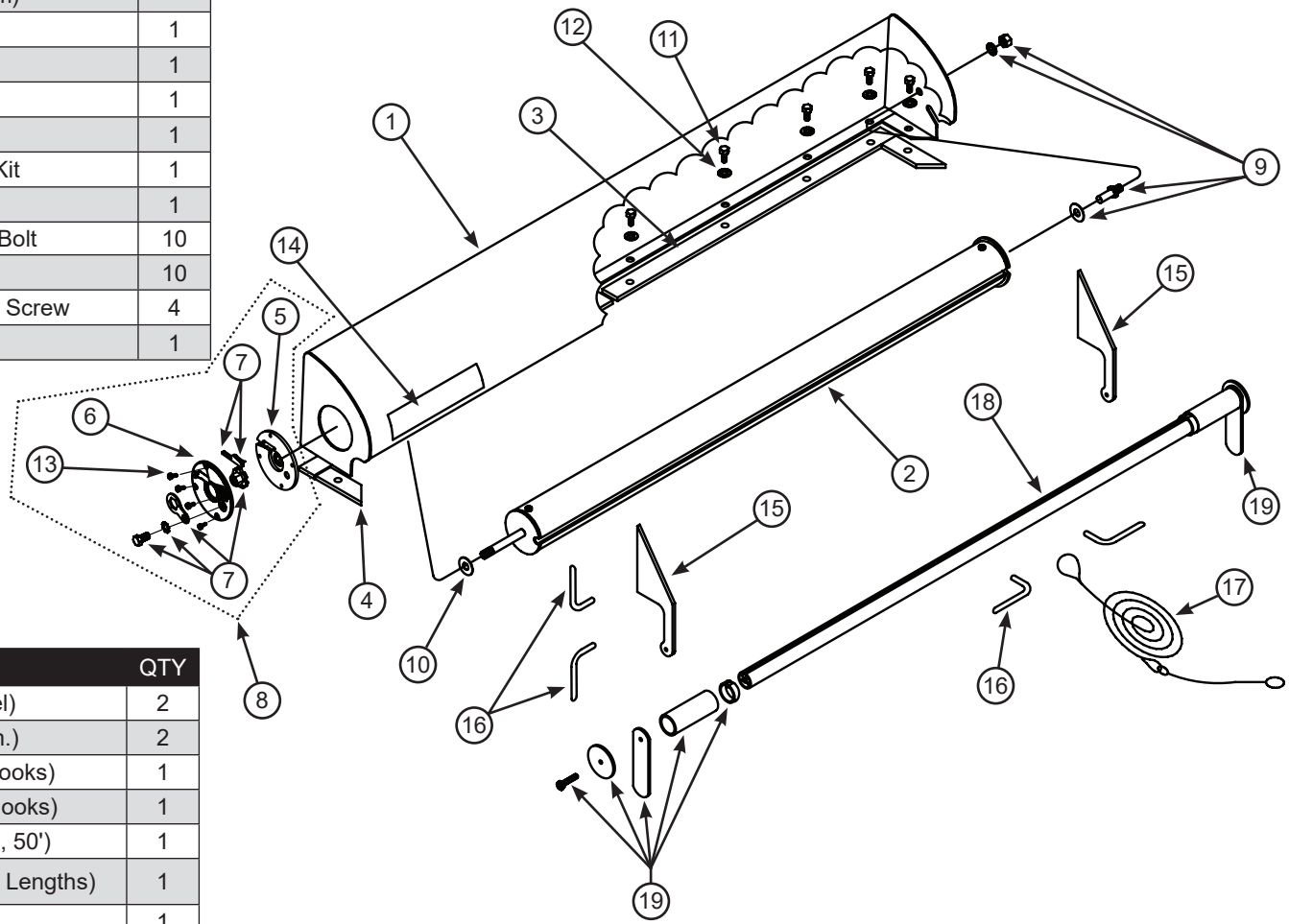

Pullrod Hardware

ITEM	PART #	DESCRIPTION	QTY
15	501-0301	Tarp Return Ramps (Steel)	2
--	501-0302	Tarp Return Ramps (Alum.)	2
16	501-0621	Rope Storage Kits (4 Steel Hooks)	1
--	501-0608	Rope Storage Kits (4 Alum. Hooks)	1
17	517-10XX	Pull Rope (20, 25, 30, 35, 40, 50')	1
18	Determined by Length	Pullrod (85, 91, 93, 96, 100, 105" Lengths)	1
19	501-0612	Pullrod Hardware Kit	1

SuperShield™ 9500M #108-0215

(Widths of 80, 84, 87, 89, 93, 96, 100")

ITEM	PART #	DESCRIPTION	QTY
1	501-01XX	9.5" Super Shield Housing 80, 84, 87, 89, 93, 96, 100"	1
2	501-13XX	Roller Tube Assy 80,84,87,89,93,96,100"	1
3	501-15XX	Mounting Bar-Steel 40, 42, 43.5, 44.5, 46.5, 48, 50" (Specify Steel or Aluminum)	2
4	501-150X	6" Large Mount (Specify Steel or Aluminum)	2
5	501-0809	Ratchet Housing	1
6	501-0806	Ratchet Cover	1
7	501-0825	Ratchet Kit	1
8	501-0630	Ratchet Assembly	1
9	501-0632	System End Plate Stud Kit	1
10	505-5002	Nylon Washer	1
11	503-3101	5/16" - 18 x 1/2"lg. HHCS Bolt	10
12	505-3102	5/16" Lock Washer	10
13	506-9905	#10 - 32 x 1/2"lg. Phillips Pan Screw	4
14	607-0061	Pulltarps Decal	1

REV. 02/21/18 WLH

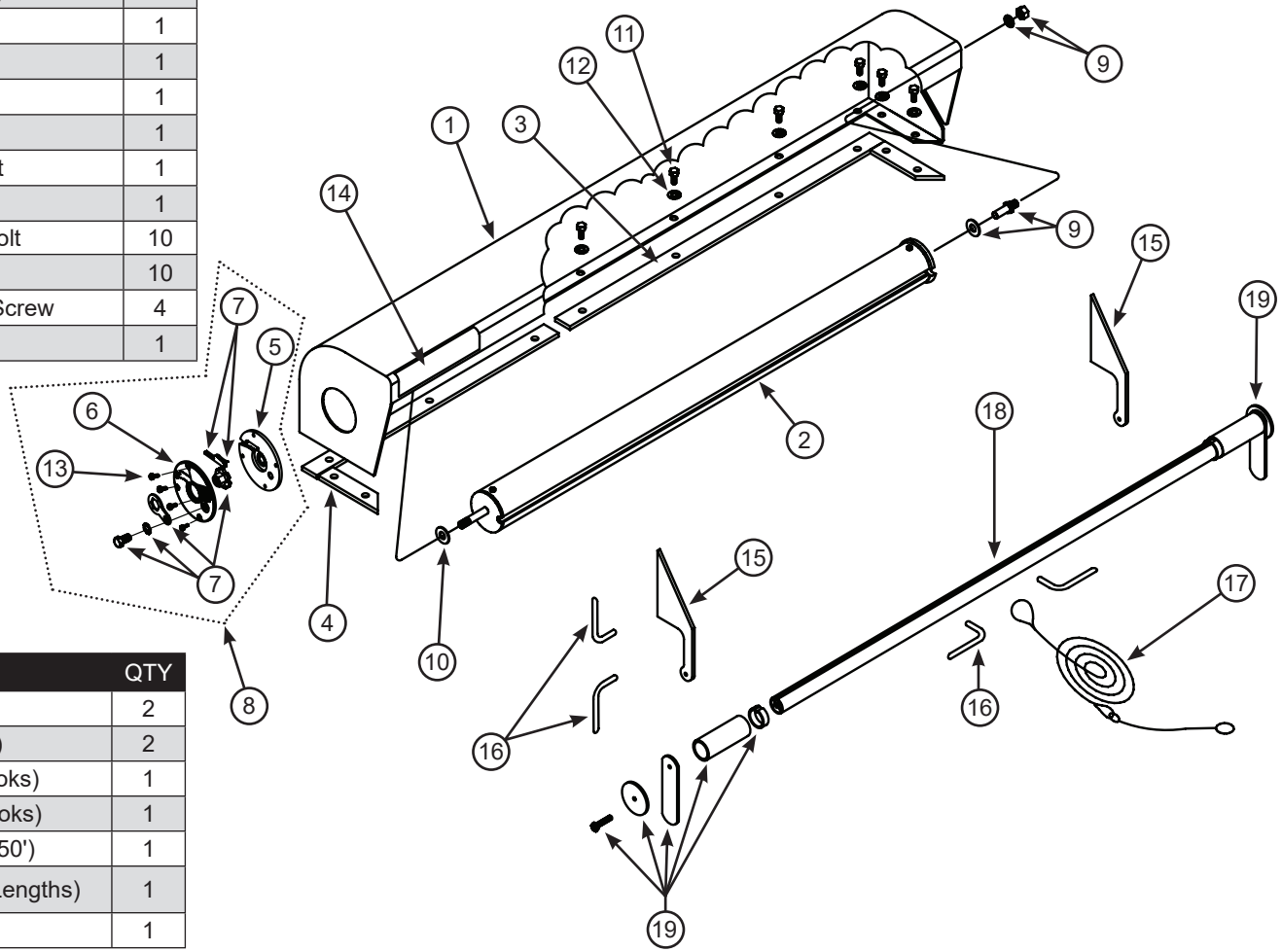

Pullrod Hardware

ITEM	PART #	DESCRIPTION	QTY
15	501-0301	Tarp Return Ramps (Steel)	2
--	501-0302	Tarp Return Ramps (Alum.)	2
16	501-0621	Rope Storage Kits (4 Steel Hooks)	1
--	501-0608	Rope Storage Kits (4 Alum. Hooks)	1
17	517-10XX	Pull Rope (20, 25, 30, 35, 40, 50')	1
18	Determined by Length	Pullrod (85, 91, 93, 96, 100, 105" Lengths)	1
19	501-0612	Pullrod Hardware Kit	1

Open 9000M #110-0215

(Widths of 80, 84, 87, 89, 93, 96, 100”)

ITEM	PART #	DESCRIPTION	QTY
1	501-1310	Roller Tube Assy. 80, 84, 87, 89, 93, 96, 100”	1
2	505-5001	1/2” AN Flat Washer	1
3	504-5001	1/2” - 13 Crimp Nut	1
4	501-152X	Open System Mount Brkt. (Specify Steel or Aluminum)	2
5	505-2502	1/4” Flat Washer USS	7
6	504-3103	5/16” - 18 Nyloc Nut	7
7	503-3104	5/16” - 18 x 3/4”lg. Carriage Bolt	6
8	501-0801	System End Plate Stud 2.4”	1
9	501-0221	9” Open End Plate, Electric (Drvr.)	1
10	501-0220	9” Open End Plate (Pass.)	1
11	503-3108	5/16” - 18 x 1 3/4”lg. HHCS Bolt	1
12	503-3103	5/16” - 18 x 3/4”lg. HHCS Bolt	3
13	505-3102	5/16” Lock Washer	3
14	501-980X	Spacer Rod 7/8” 80, 84, 87, 89, 93, 96, 100”	1
15	503-7501	3/4” - 10 x 1”lg. HHCS Bolt	2
16	517-0906	12V DC Electric Motor	1
--	514-0124	6 Ga. Electric Wire (Not shown)	100’
--	514-0101	Switch Assembly (Not shown)	1

REV. 11/15/16 WLH

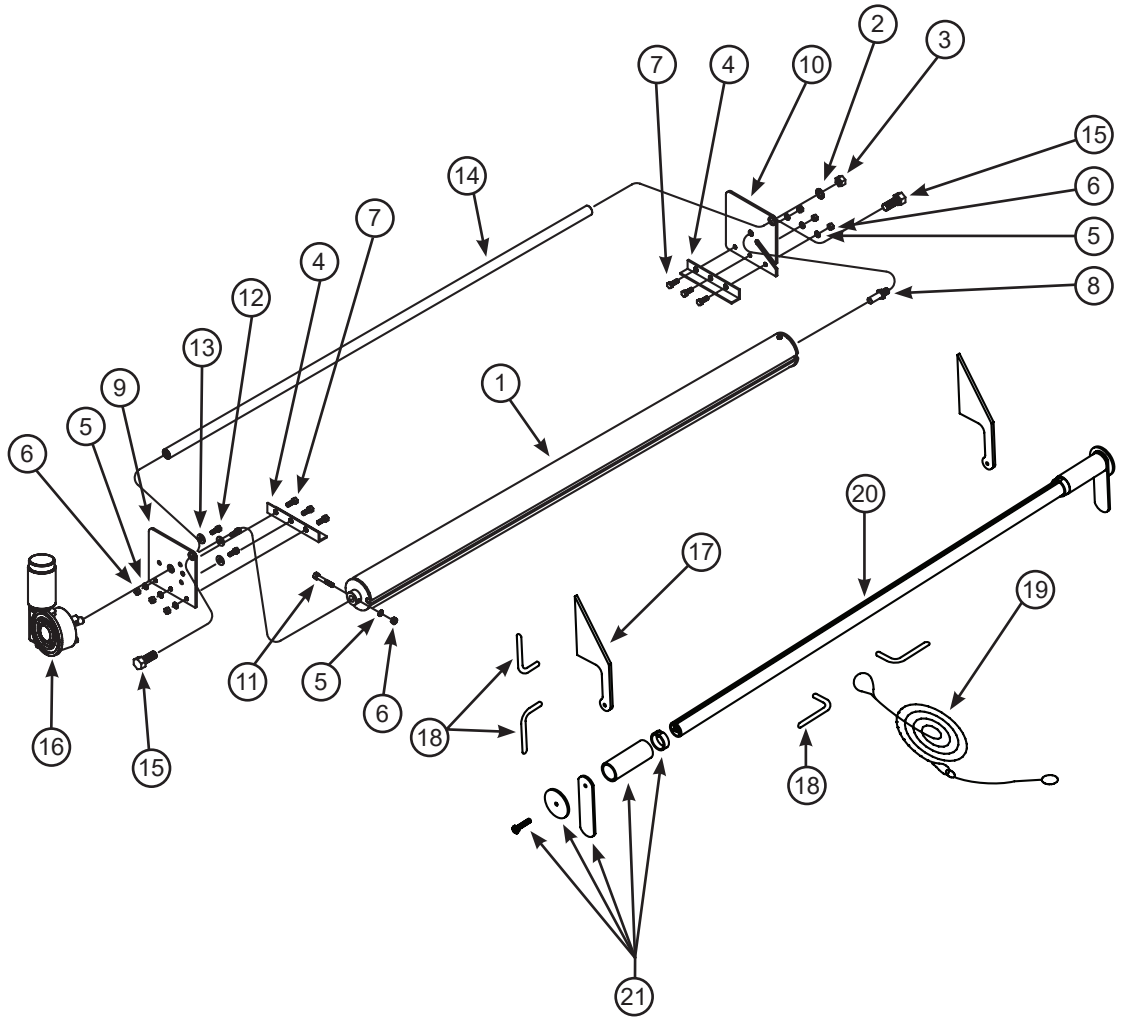

Pullrod Hardware

ITEM	PART #	DESCRIPTION	QTY
17	501-0301	Tarp Return Ramps (Steel)	2
--	501-3102	Tarp Return Ramps (Alum.)	2
18	501-0643	Rope Storage Hooks (Steel)	4
--	501-0642	Rope Storage Hook (Alum.)	4
19	517-10XX	Pull Rope (20, 25, 30, 35, 40, 45, 50')	1
20	Determined by Length	Pullrod (85, 91, 93, 96, 99, 105" Lengths)	1
21	501-0612	Pullrod Hardware Kit	1

SuperShield™ 9500E #111-0215
(Widths of 80, 84, 87, 89, 93, 96, 100")

ITEM	PART #	DESCRIPTION	QTY
1	501-01XX	SS Housing 9.5"80, 84, 87, 89, 93, 96, 100"	1
2	501-13XX	Roller Tube Assy. 80,84,87,89,93,96,100"	1
3	501-15XX	Mounting Bar 40, 42, 43.5, 44.5, 46.5, 48, 50" (Specify Steel or Aluminum)	2
4	505-2502	1/4" Flat Washer USS	1
5	503-3108	5/16" - 18 x 1-3/4"lg. HHCS Bolt	1
6	503-3105	5/16" - 18 x 1"lg. HHCS Bolt	3
7	503-3101	5/16" - 18 x 1/2"lg. HHCS Bolt	12
8	505-3102	5/16" Lock Washer	15
9	504-3103	5/16" - 18 Nyloc Nut	1
10	506-9905	#10 - 32 x 1/2"lg. Phillips Head Pan	4
11	501-1235	Alum. Adaptor Plate-SW Motor	1
12	501-0632	System End Plate Stud Kit	1
13	501-150X	6" Large Steel Mounting Brkt. (Specify Steel or Aluminum)	2
14	517-0906	12V DC electric Motor	1
--	514-0121	6 Ga. Electric Wire (Not Shown)	100'
--	514-0505	Gray Quick Disconnect (Not Shown)	2
--	514-0101	Switch Assembly (Not shown)	1
15	607-0061	Pulltarps Decal	1

REV. 10/20/16 WLH

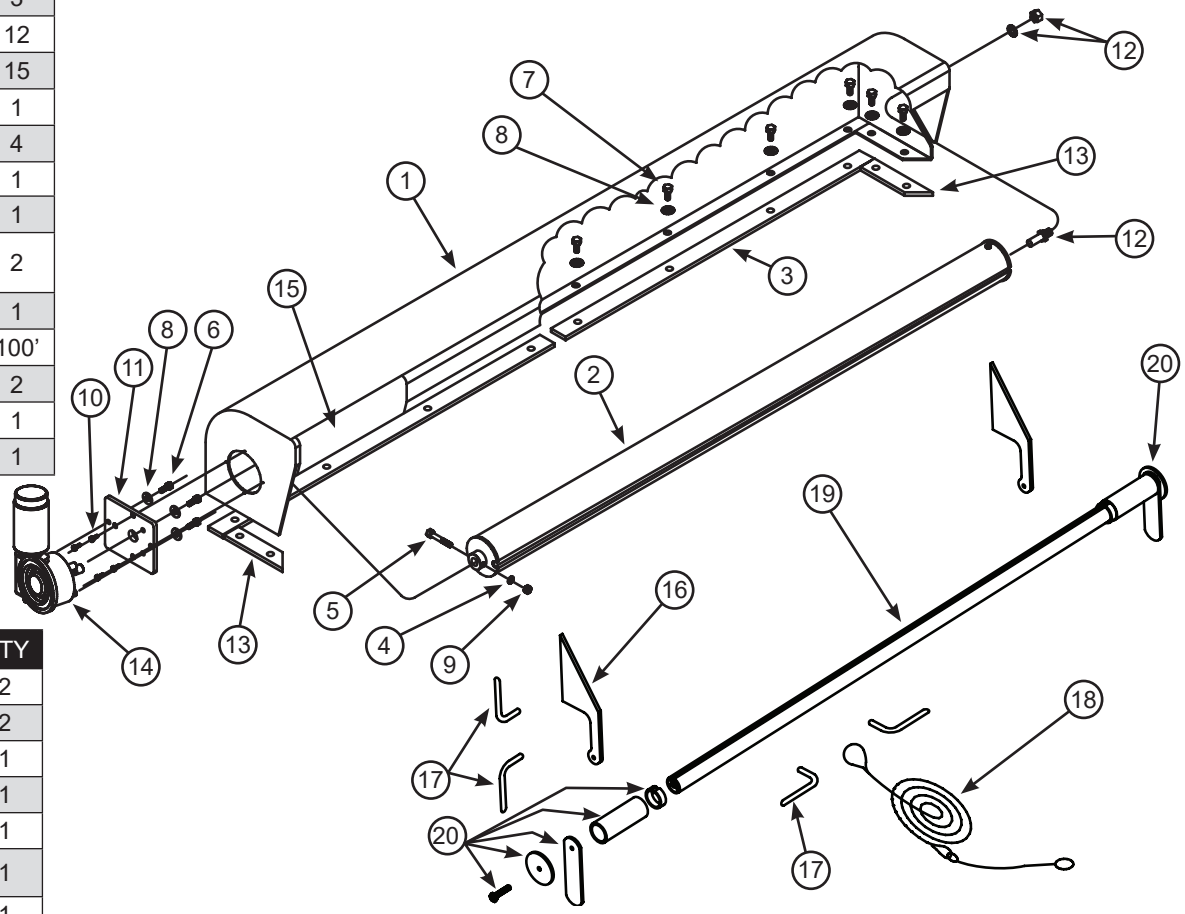

Pullrod Hardware

ITEM	PART #	DESCRIPTION	QTY
16	501-0301	Tarp Return Ramps (Steel)	2
--	501-0302	Tarp Return Ramps (Alum.)	2
17	501-0621	Rope Storage Kits (4 Steel Hooks)	1
--	501-0608	Rope Storage Kits (4 Alum. Hooks)	1
18	517-10XX	Pull Rope (20, 25, 30, 35, 40, 50')	1
19	Determined by Length	Pullrod (85, 91, 93, 96, 100, 105" Lengths)	1
20	501-0612	Pullrod Hardware Kit	1

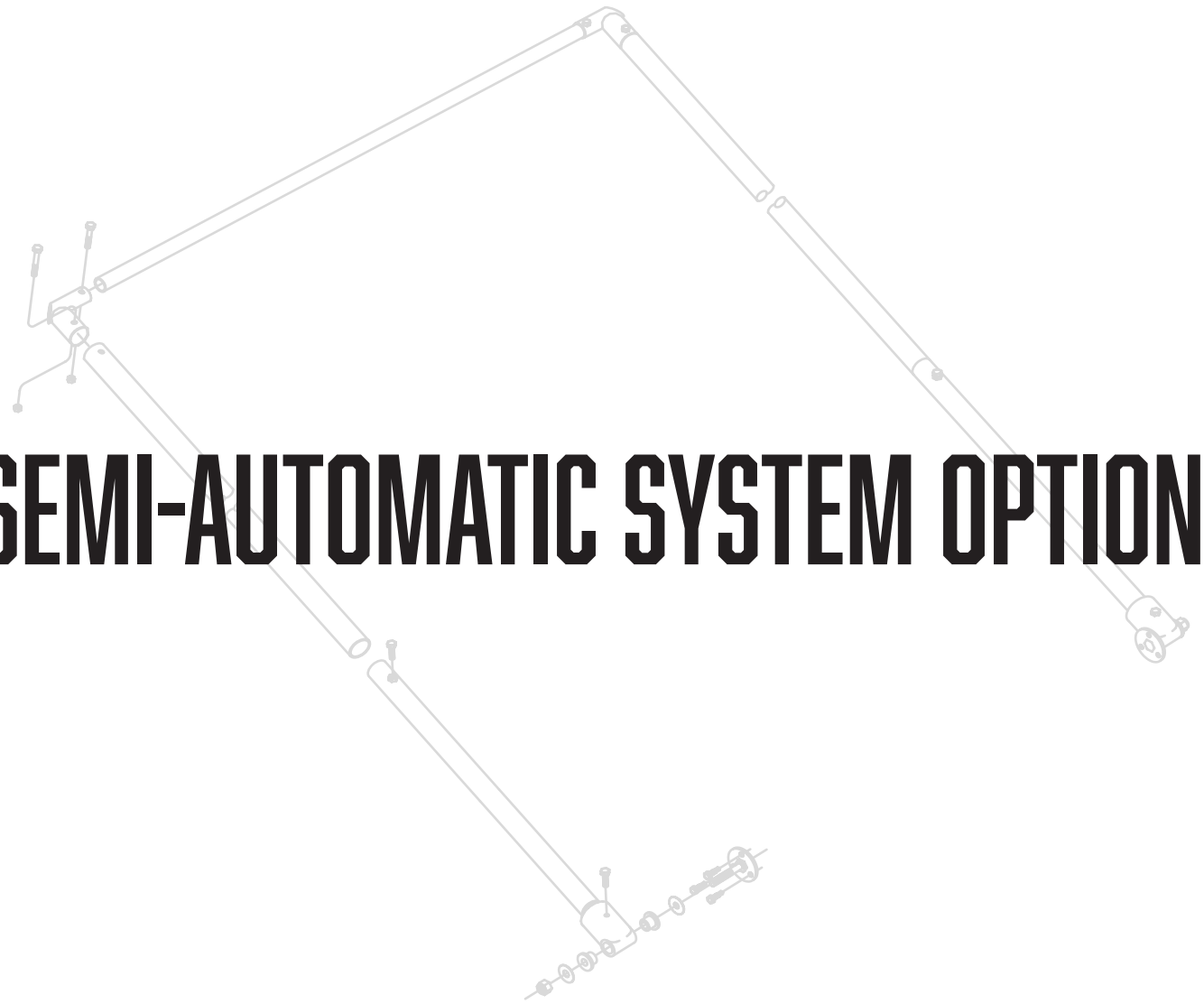

SEMI-AUTOMATIC SYSTEM OPTIONS

Manual Steel Arm Retrofit Kit #113-2212

ITEM	PART #	DESCRIPTION	QTY
1	503-3713	3/8” - 16 x 2-1/2”lg. HHCS Bolt	2
2	503-3709	3/8” - 16 x 2”lg. HHCS Bolt	2
3	504-3702	3/8” - 16 Nyloc Nut	6
4	501-1229	Lower Connection Arm	2
5	501-1195	Pivot Assembly	2
6	503-5003	1/2” - 13 x 1”lg. HHCS Bolt	2
7	501-1118	Arm System Pullrod Connection	2
8	501-2235	EZ-Mount Assembly	2

Arm Options

ITEM	PART #	DESCRIPTION	QTY
9	501-1202	Upper Arm Tubing-Drilled	2
10	501-1205	Upper Arm Tubing-Drilled-Bent	2

REV. 04/09/19 WLH

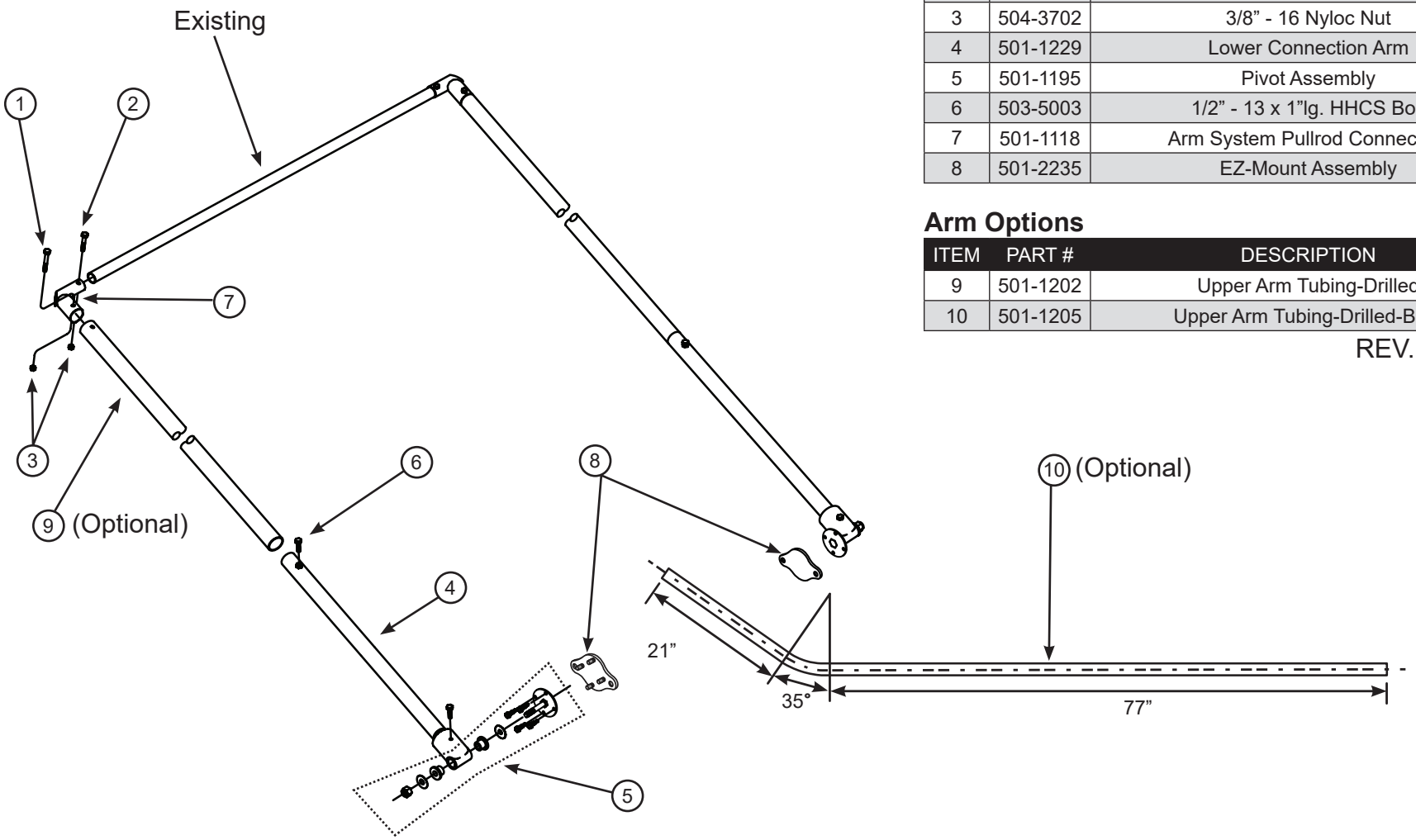

Steel Manual Arms (Complete Kits) #113-2214, 113-2215

ITEM	PART #	DESCRIPTION	QTY
1	501-1251	Elbow Kit (Steel Arms)	1
2	501-0430	Universal Tear Drop Pullbar	1
3	501-1195	Pivot Assembly	2
4	501-1229	Lower Connection Arm Tube	2
5	501-1293	Tear Drop Bumper Kit	1
6	501-2235	EZ-Mount Assembly	2

Arm Options

ITEM	PART #	DESCRIPTION	QTY
7	501-1202	Straight Upper Arm	2
8	501-1205	Upper Arm Tubing-Drilled-Bent	2

REV. 04/10/19 WLH

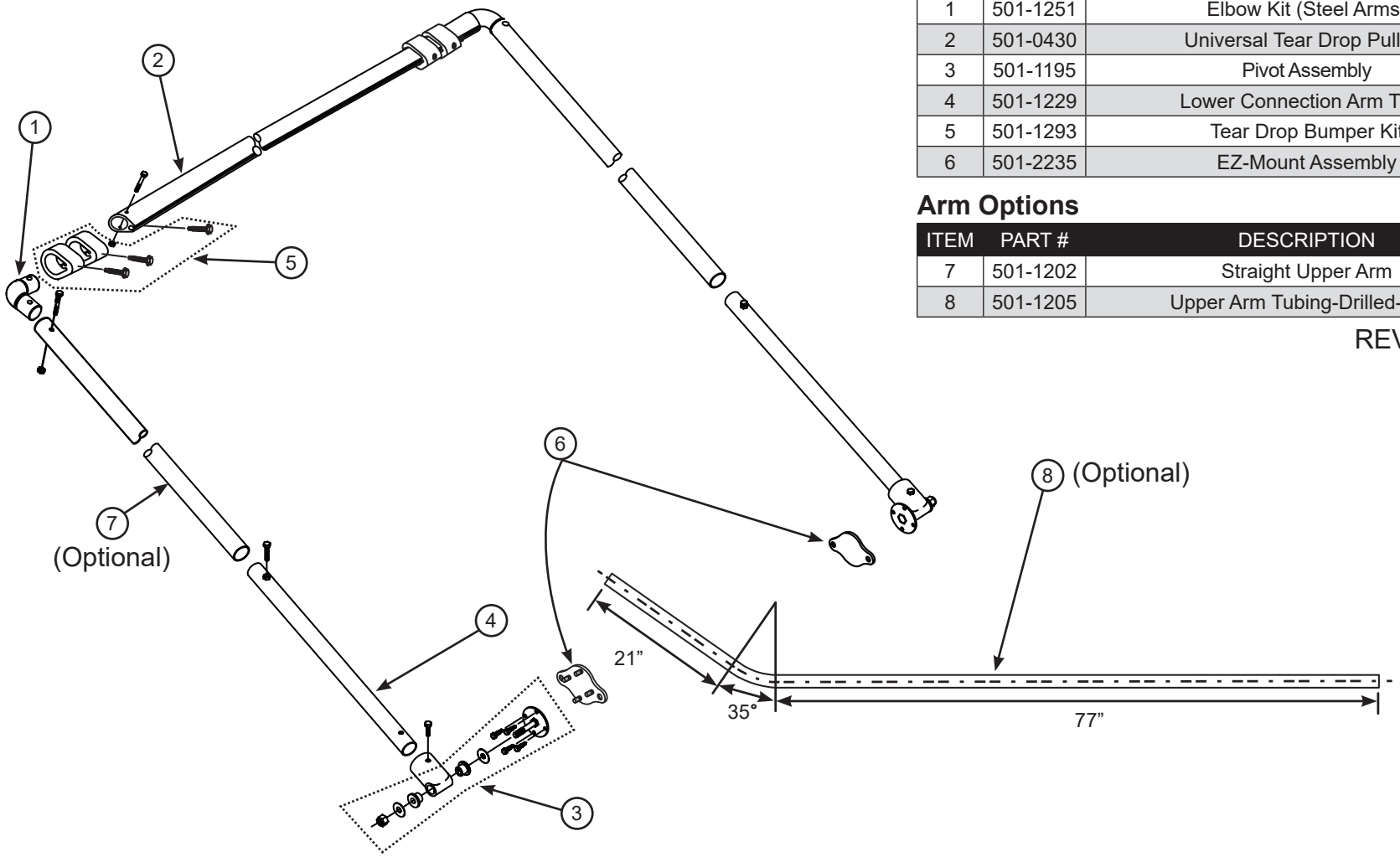

Manual Aluminum Arm Retrofit Kit #113-2222

ITEM	PART #	DESCRIPTION	QTY
1	501-1118	Arm System Pullrod Connection	2
2	503-3713	3/8” - 16 x 2-1/2”lg. HHCS Bolt	2
3	503-3709	3/8” - 16 x 2”lg. HHCS Bolt	2
4	504-3702	3/8” - 16 Nyloc Nut	6
5	501-1217	Aluminum Lower Arm Tube	2
6	501-1195	Pivot Assembly	2
7	503-5003	1/2” - 13 x 1”lg. HHCS Bolt	2
8	501-2235	EZ-Mount Assembly	2

Arm Options

ITEM	PART #	DESCRIPTION	QTY
9	501-1211	Upper Arm Tubing-Drilled	2
10	501-1214	Aluminum Upper Arm with Bend (Optional - Sold Separately)	2

REV. 04/10/19 WLH

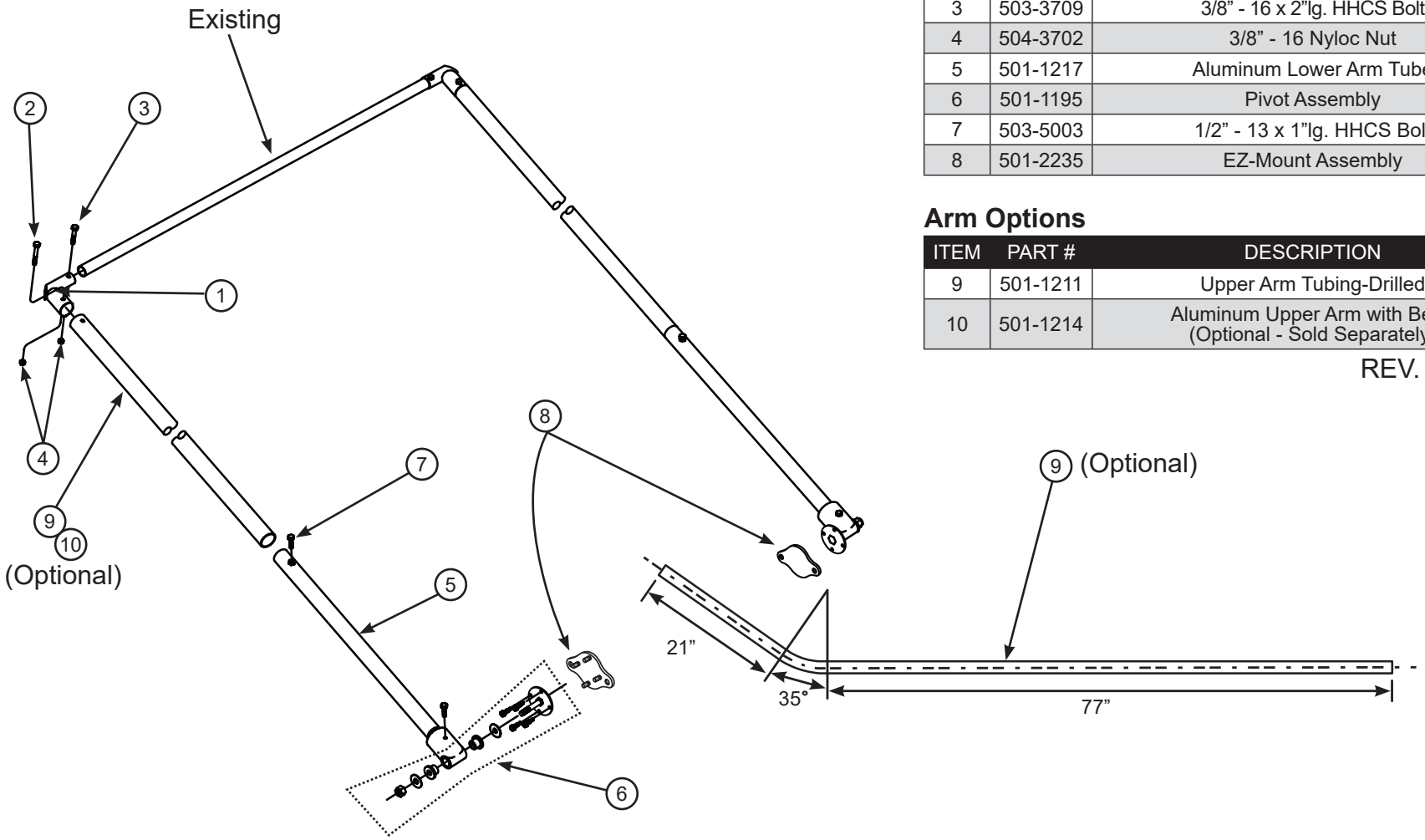

Aluminum Manual Arm Kits #113-2224, #113-2225

ITEM	PART #	DESCRIPTION	QTY
1	501-0791	Elbow Kit for Aluminum with Tear Drop	1
2	501-0430	Universal Tear Drop Pullbar	1
3	501-1195	Pivot Assembly Kit	2
4	501-1217	Aluminum Lower Arm Tube	2
5	501-1293	Tear Drop Bumper Kit	1
6	501-2235	EZ-Mount Assembly	2

Arm Options

ITEM	PART #	DESCRIPTION	QTY
7	501-1211	Aluminum Upper Arm	2
8	501-1214	Aluminum Upper Arm with Bend	2

REV. 10/21/16 WLH

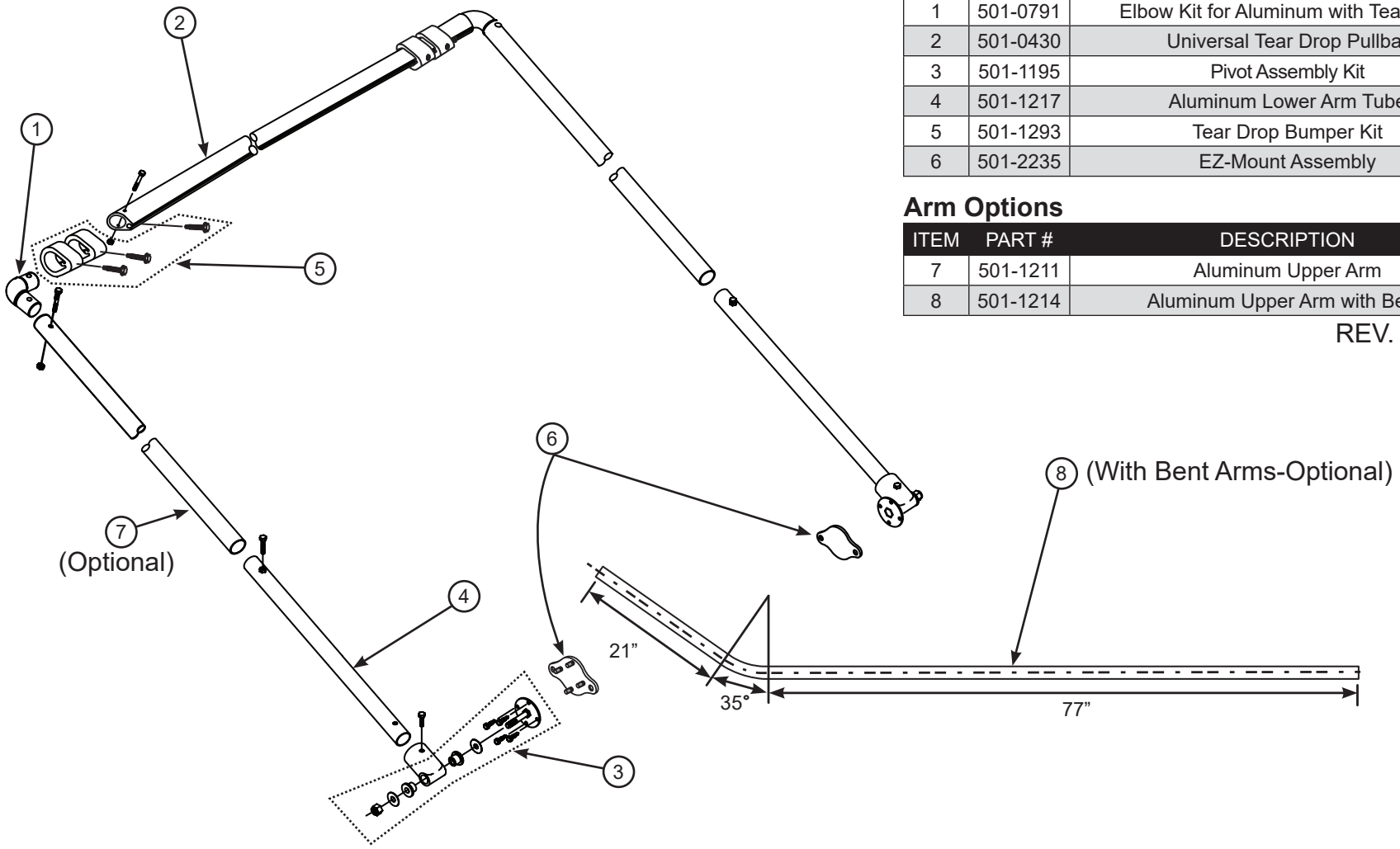

Optional Load Climber #501-0901

ITEM	PART #	DESCRIPTION	QTY
1	505-2502	1/4” Flat Washer USS	2
2	503-7501	3/4” - 10 x 1”lg. HHCS Bolt	2
3	504-2503	1/4” - 20 Nyloc Nut	2
4	501-0905	Load Climber Angle	1
5	503-2514	1/4” - 20 x 2-1/4”lg. HHCS Bolt	2
6	501-0902	Load Climber Rod 32’lg. 7/8” Dia.	1
7	501-0909	Load Climber 1” PVC 1 1/4” OD.	1
8	501-0903	Load Climber Swivel Arm 5”	2
9	501-0912	Strap for Load Climber	1
10	501-0910	14-3/4”lg. Roller Assembly	2

REV. 10/14/16 WLH

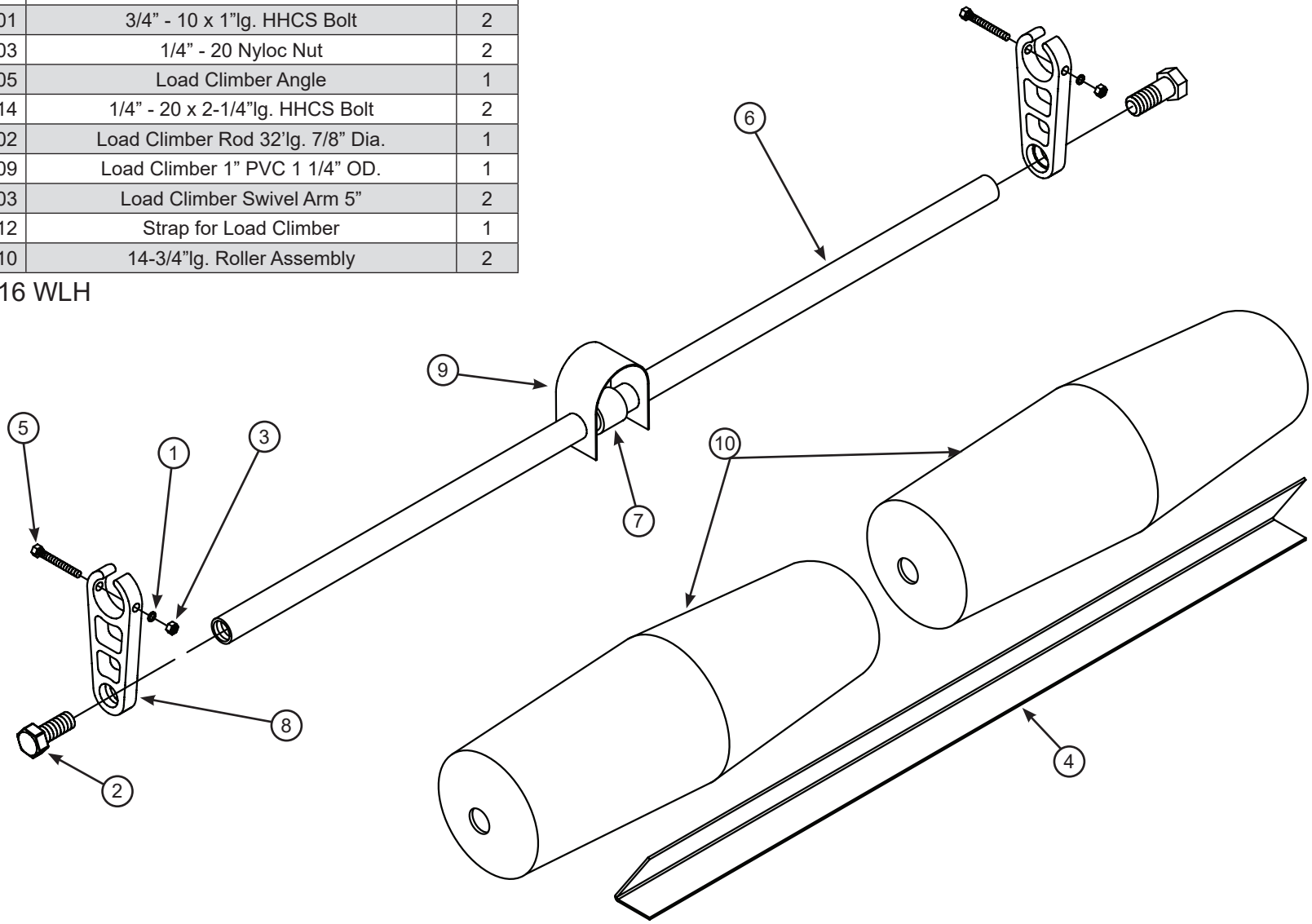

Optional Asphalt Load Climber #501-0913

ITEM	PART #	DESCRIPTION	QTY
1	505-2502	1/4” Flat Washer USS	2
2	503-7501	3/4” - 10 x 1”lg. HHCS Bolt	2
3	504-2503	1/4” - 20 Nyloc Nut	2
4	501-0905	Load Climber Angle	1
5	503-2514	1/4” - 20 x 2-/4”lg. HHCS Bolt	2
6	501-0902	Load Climber Rod 32’lg. 7/8” Dia.	1
7	501-0909	Load Climber 1” PVC 1-1/4” OD.	1
8	501-0903	Load Climber Swivel Arm 5”	2
9	501-0912	Strap for Load Climber	1
10	501-0914	14-3/4”lg. Asphalt Roller Assembly	2

REV. 10/14/16 WLH

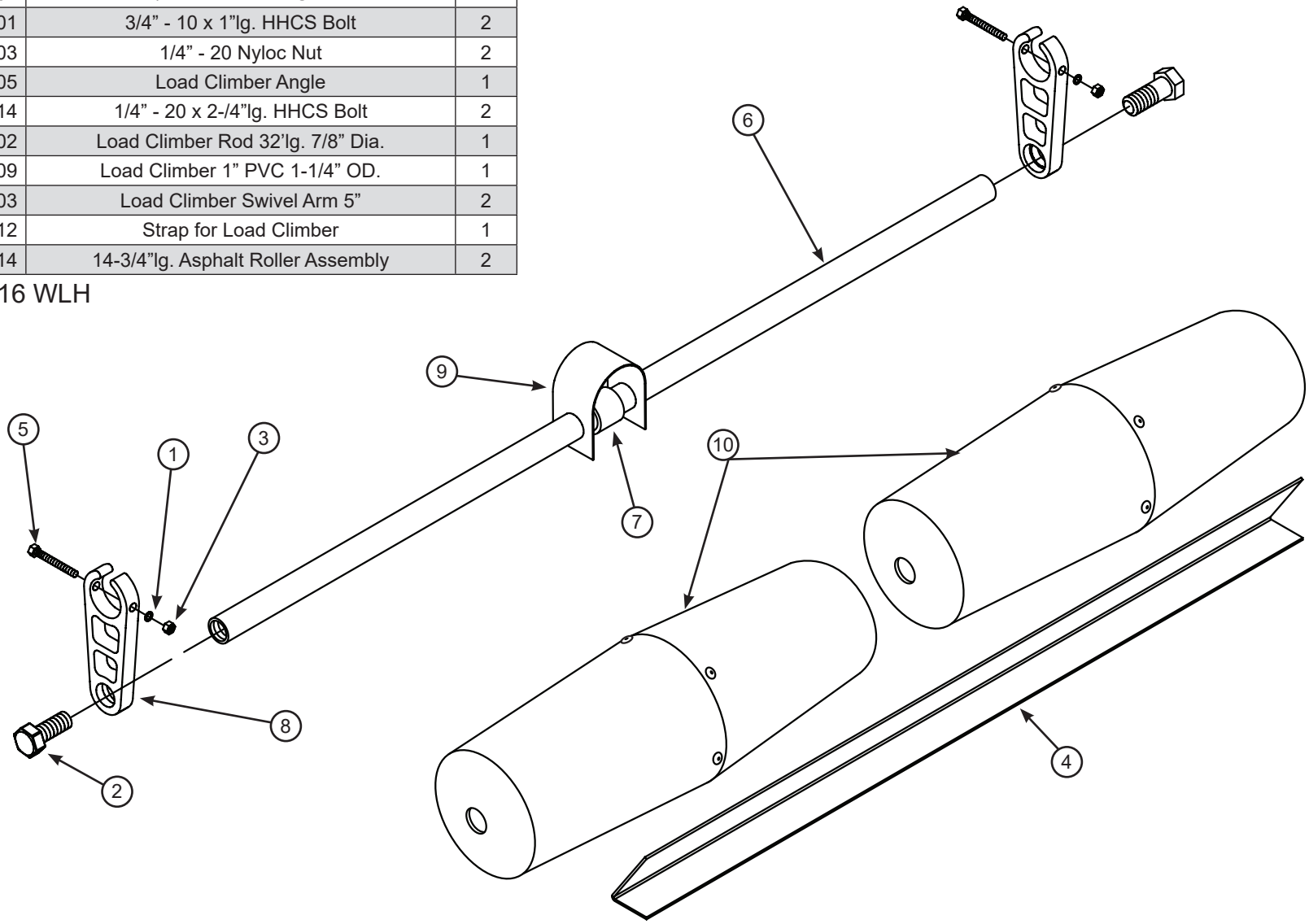

AUTOMATIC SYSTEMS

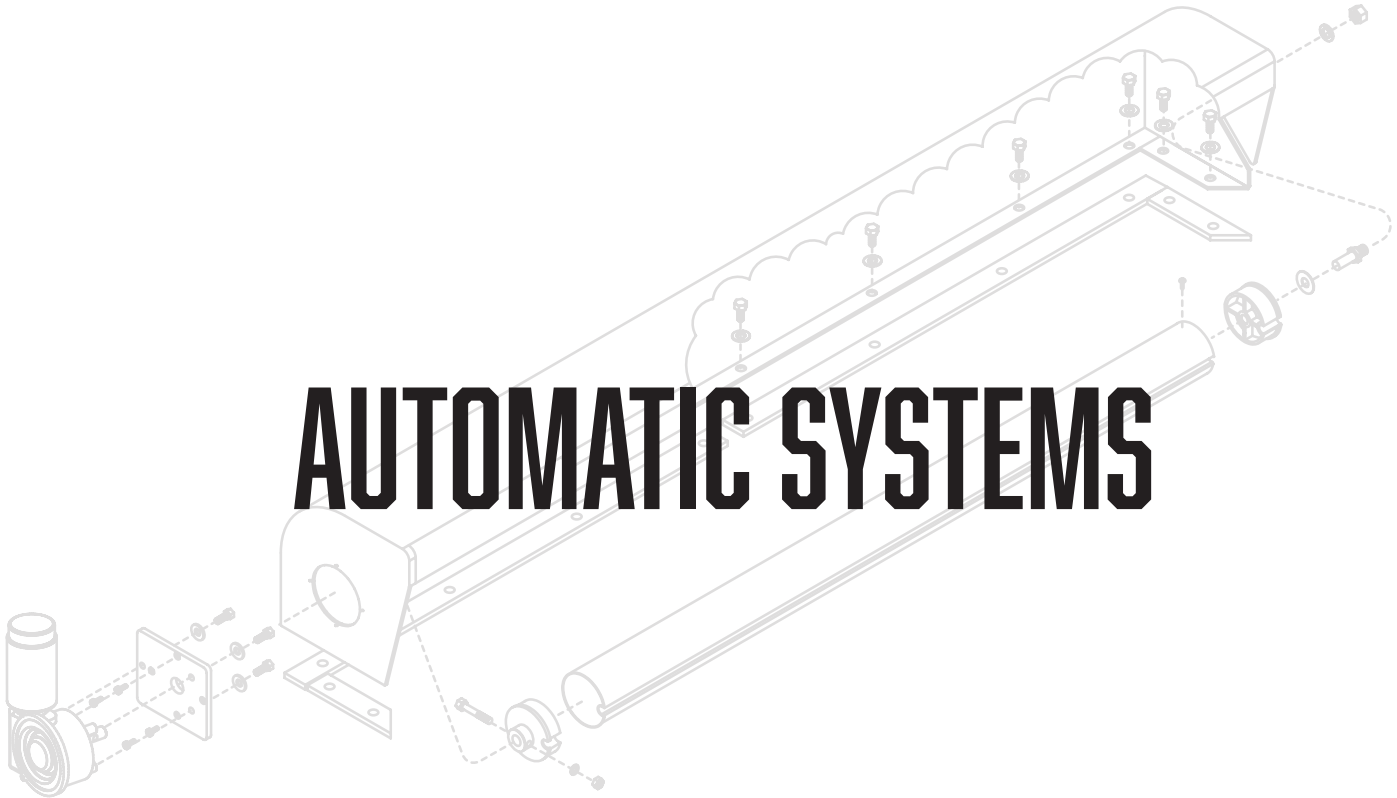

Open 9000E #201-0215

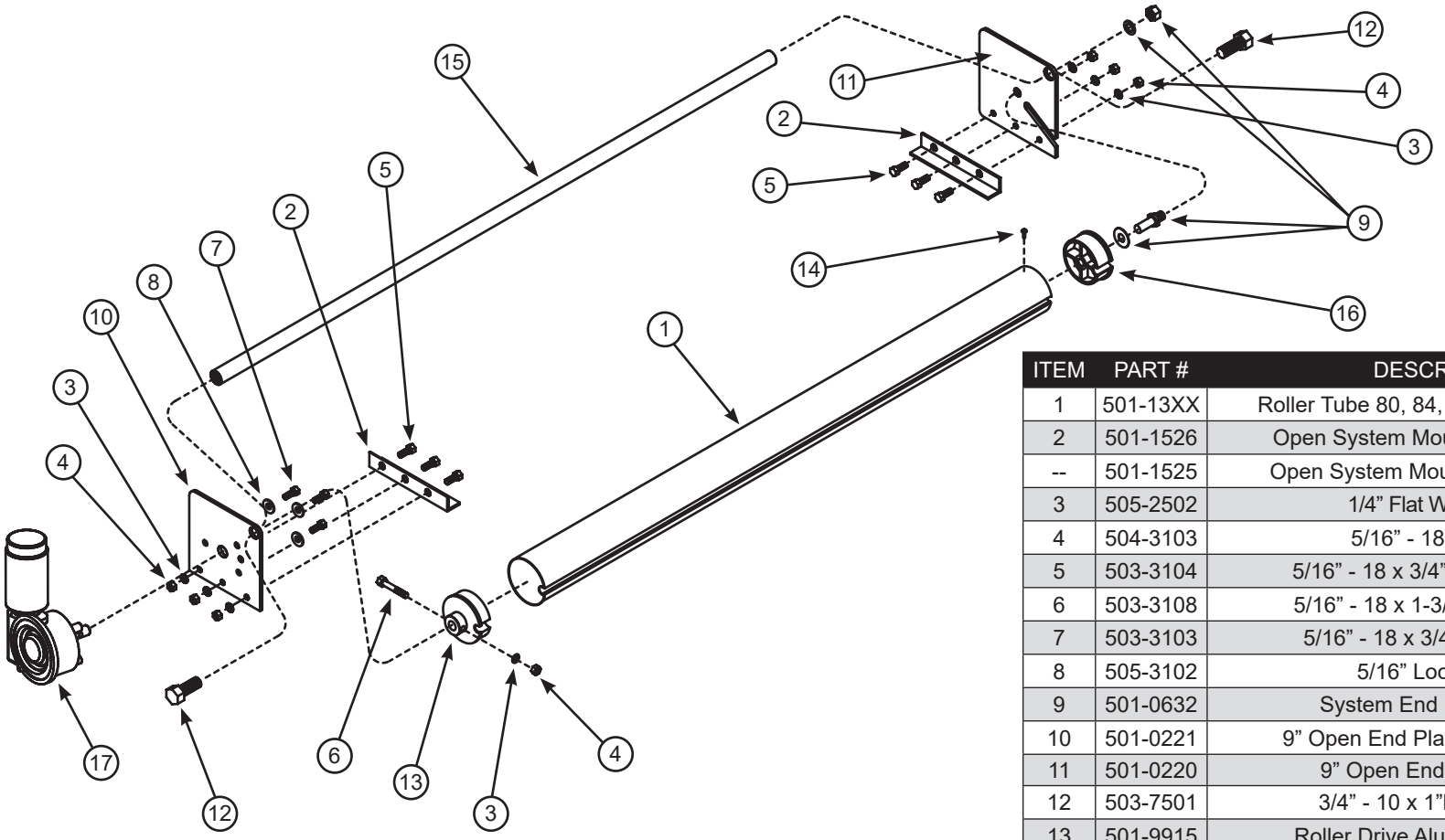

ITEM	PART #	DESCRIPTION	QTY
1	501-13XX	Roller Tube 80, 84, 87, 89, 93, 96, 100”	1
2	501-1526	Open System Mount Bracket (Steel)	2
--	501-1525	Open System Mount Bracket (Alum.)	2
3	505-2502	1/4” Flat Washer USS	7
4	504-3103	5/16” - 18 Nyloc Nut	7
5	503-3104	5/16” - 18 x 3/4”lg. Carriage Bolt	6
6	503-3108	5/16” - 18 x 1-3/4”lg. HHCS Bolt	1
7	503-3103	5/16” - 18 x 3/4”lg. HHCS Bolt	3
8	505-3102	5/16” Lock Washer	3
9	501-0632	System End Plate Stud Kit	1
10	501-0221	9” Open End Plate, Electric (Drvr.)	1
11	501-0220	9” Open End Plate (Pass.)	1
12	503-7501	3/4” - 10 x 1”lg. HHCS Bolt	2
13	501-9915	Roller Drive Aluminum End Cap	1
14	506-9916	Screw #8 - 18 x 3/4” Self Drilling	1
15	501-980X	Spacer Rod 7/8” - 80, 84, 87, 89, 93, 96, 100”	1
16	517-0102	Flanged End Cap	1
17	517-0906	1.1HP 12V DC Electric Motor	1
--	517-0909	1.3HP 12V DC Electric Motor	1

REV. 04/24/19 WLH

Aluminator™ 7000E #204-0215

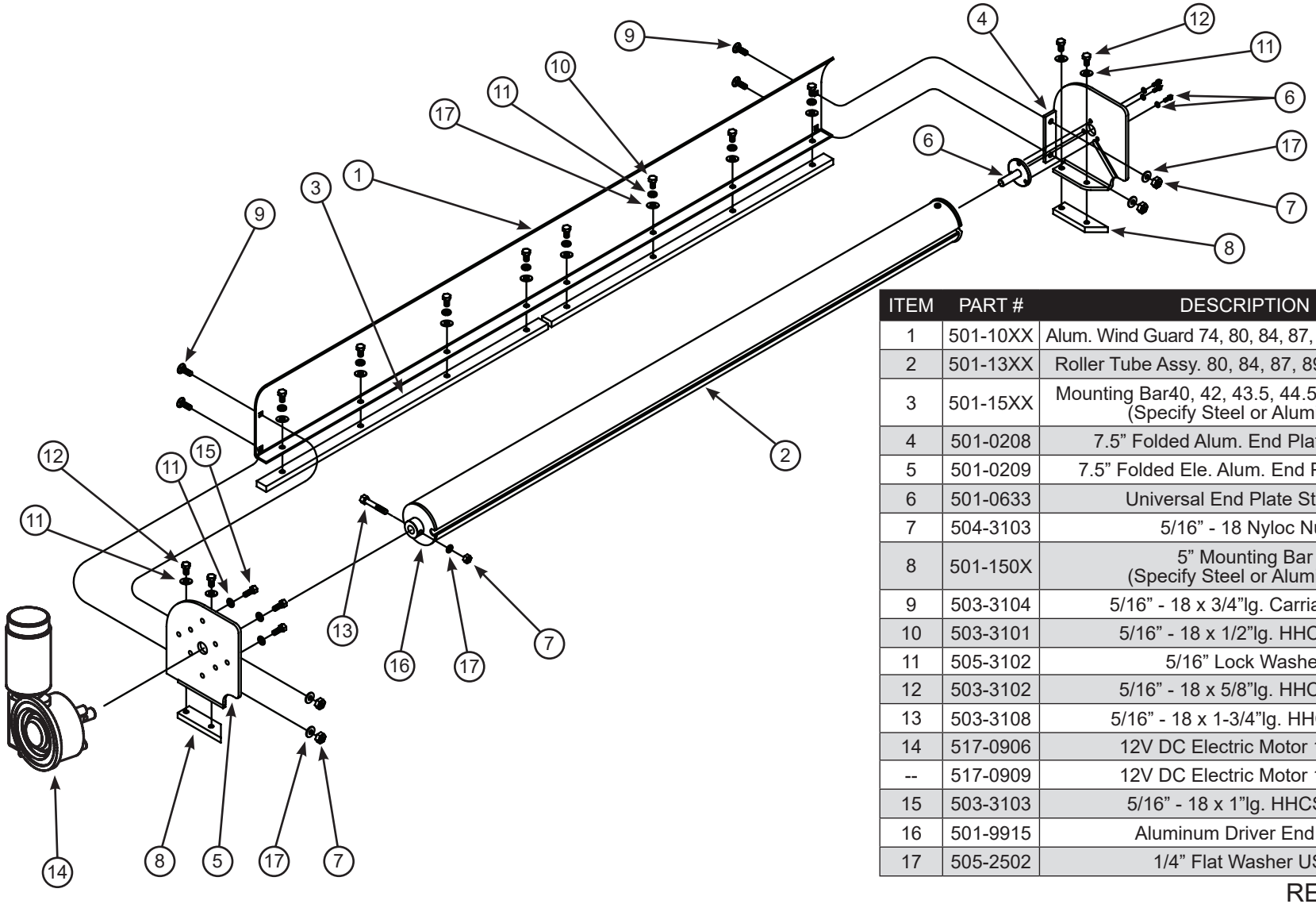

ITEM	PART #	DESCRIPTION	QTY
1	501-10XX	Alum. Wind Guard 74, 80, 84, 87, 89, 96, 96, 100”	1
2	501-13XX	Roller Tube Assy. 80, 84, 87, 89, 93, 96, 100”	1
3	501-15XX	Mounting Bar40, 42, 43.5, 44.5, 46.5, 48, 50” (Specify Steel or Aluminum)	2
4	501-0208	7.5” Folded Alum. End Plate (Pass.)	1
5	501-0209	7.5” Folded Ele. Alum. End Plate (Drvr.)	1
6	501-0633	Universal End Plate Stud Kit	1
7	504-3103	5/16” - 18 Nyloc Nut	5
8	501-150X	5” Mounting Bar (Specify Steel or Aluminum)	2
9	503-3104	5/16” - 18 x 3/4”lg. Carriage Bolt	4
10	503-3101	5/16” - 18 x 1/2”lg. HHCS Bolt	8
11	505-3102	5/16” Lock Washer	15
12	503-3102	5/16” - 18 x 5/8”lg. HHCS Bolt	4
13	503-3108	5/16” - 18 x 1-3/4”lg. HHCS Bolt	1
14	517-0906	12V DC Electric Motor 1.1 HP	1
--	517-0909	12V DC Electric Motor 1.3 HP	--
15	503-3103	5/16” - 18 x 1”lg. HHCS Bolt	3
16	501-9915	Aluminum Driver End Cap	1
17	505-2502	1/4” Flat Washer USS	13

REV. 06/21/19 WLH

Aluminator™ 8500E #234-0215

ITEM	PART #	DESCRIPTION	QTY
1	501-0175	80” Aluminum 8.5” Housing	1
2	501-1051	8.5” Right Aluminum End Plate	1
3	501-1052	8.5” Electric Aluminum End Plate	1
4	501-0805	Universal Bolt in Stud	1
5	501-1506	6” Large Steel Mounting	2
6	501-1507	40” Mounting Bar-Steel	2
7	501-9934	Galvanized Steel Bracket	2
8	503-2503	1/4” - 20 x 1/2” HHD Bolt	3
9	503-3101	5/16” - 18 x 1/2” Hex Bolt	12
10	503-3103	5/16” - 18 x 3/4” HHCS Bolt	3
11	503-3104	5/16” - 18 x 3/4” Carriage Bolt	10

ITEM	PART #	DESCRIPTION	QTY
12	503-3108	5/16” - 18 x 1-3/4” HHCS Hex Bolt	1
13	504-3103	5/16” - 18 Nylock Nut Steel	11
14	505-2502	1/4” USS Washer 5/16”	19
15	505-2503	1/4” Lock Washer - Plated	3
16	505-3102	5/16” Lock Washer	15
17	501-9915	Roller Drive Aluminum End Cap	1
18	517-0102	Flanged End Cap	1
19	517-0502	78mm Roller Tube Galvanized	1
20	506-9916	Screw, #8 - 18 x 3/4” Self (Not Shown)	1
21	517-0906	1.1HP 12V DC Electric Motor	1
--	517-0909	1.3HP 12V DC Electric Motor	1

REV. 06/21/19 WLH

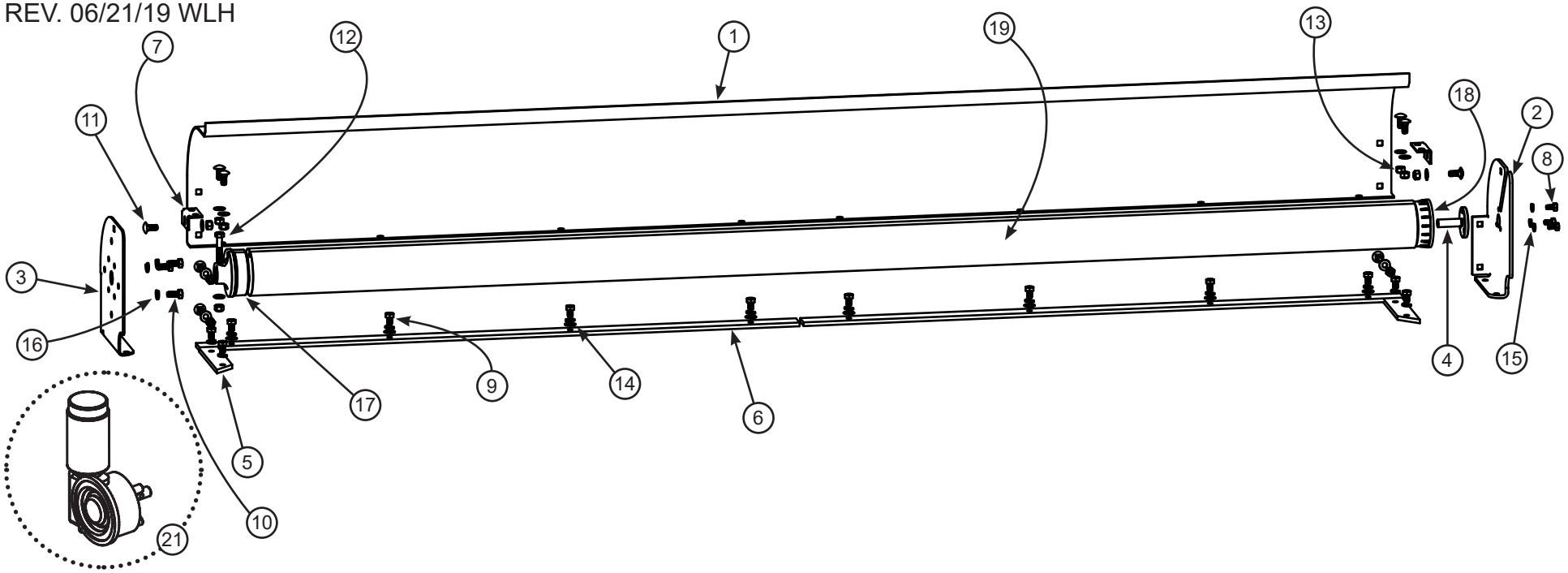

Steel Protector™ #208-0215

ITEM	PART #	DESCRIPTION	QTY
1	501-01XX	Galv. Steel Protector Hsg. 74, 80, 84, 87, 89, 96, 96, 100”	1
2	501-13XX	Roller Tube Assy. 80, 84, 87, 89, 93, 96, 100”	1
3	501-0138	48” x 5 1/2” Galvanized Insert	1
4	501-152X	System Mount Bracket (Specify Steel or Aluminum - Left)	1
5	501-152X	System Mount Bracket (Specify Steel or Aluminum - Right)	1
6	501-0254	Right End Plate for “N” System	1
7	501-0255	Electric End Plate “N” System	1
8	501-0633	Universal Bolt In Stud Kit	1
9	503-2505	1/4” - 20 x 3/4”lg. Carriage Bolt	8
10	505-2502	1/4” Flat Washer USS	25
11	504-2503	1/4” - 20 Nyloc Nut	8
12	503-3104	5/16” - 18 x 3/4”lg. Carriage Bolt	4
13	504-3103	5/16” - 18 Nyloc Nut	5
14	503-2501	1/4” - 20 x 1/2”lg. Carriage Bolt	12
15	503-3108	5/16” - 18 x 1-3/4”lg. HHCS Bolt	1
16	503-3103	5/16” - 18 x 3/4”lg. HHCS Bolt	3
17	505-3102	5/16” Lock Washer	3
18	517-0906	12V DC Electric Motor 1.1HP	1
--	517-0909	12V DC Electric Motor 1.3HP	--
19	504-2506	1/4” - 20 x Nyloc Nut (Thin)	12
20	501-9915	Driver Aluminum End Cap	1
21	607-0061	Pulltarps Decal	1

ITEM	PART #	DESCRIPTION	QTY
22	501-06XX	Steel Protector System Hardware (Specify Steel or Aluminum)	1

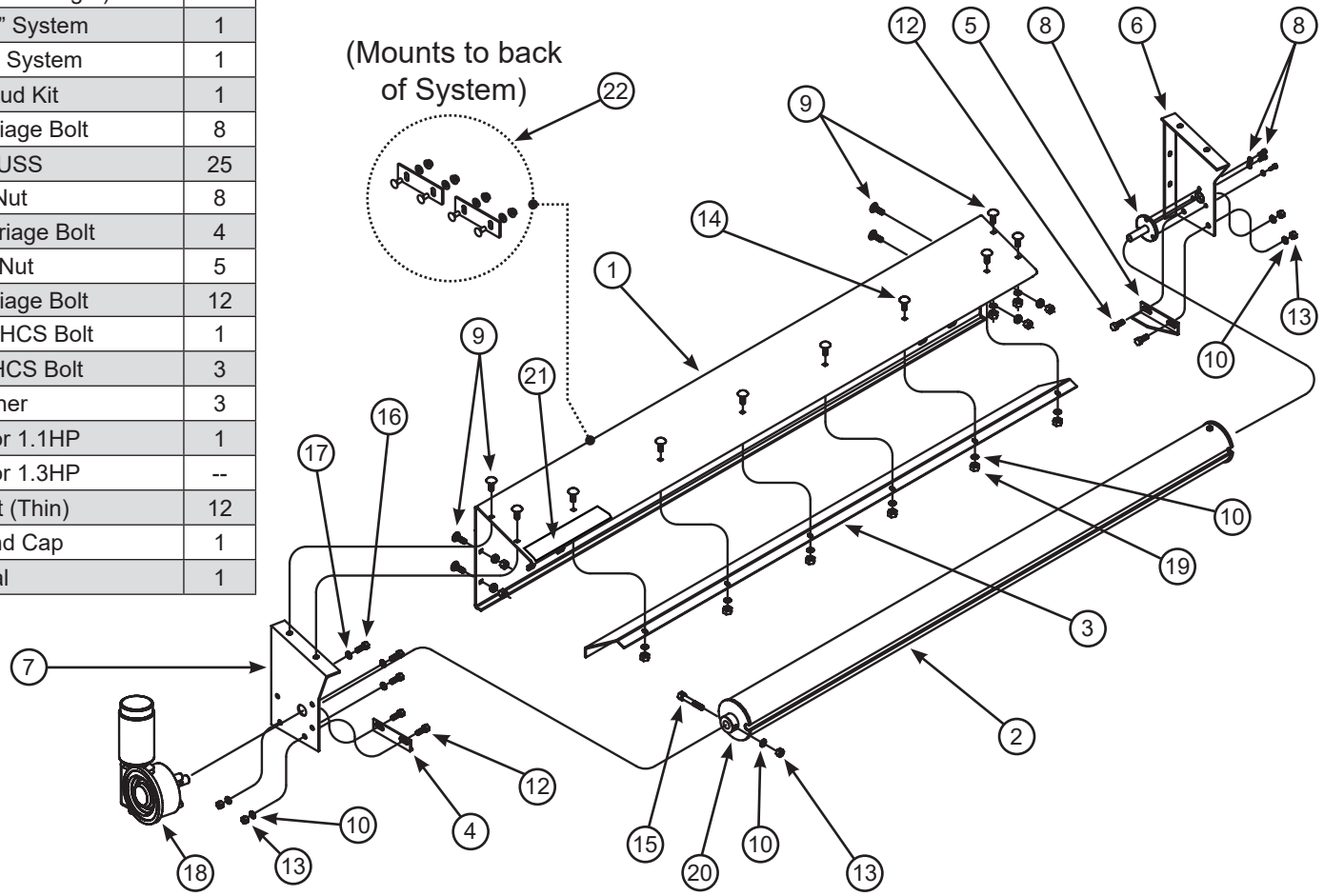

REV. 04/24/19 WLH

Steel Protector +™ #218-0215

ITEM	PART #	DESCRIPTION	QTY
1	501-0138	Galvanized Insert	1
2	501-0190	87” Galvanized Steel Protector + Housing	1
3	501-0282	Protector + Electric End Plate	1
4	501-0281	Protector + End Plate Passenger	1
5	501-0801	System End Plate Stud 2.4”	1
6	501-1312	87” Roller Assembly for Electric Drive	1
7	501-1506	6” Large Steel Mounting Bar	2
8	501-1509	43.5” Mounting Bar Steel	2
9	503-2501	1/4” - 20 x 1/2” USS Carriage Bolt	12
10	503-2505	1/4” - 20 x 3/4” USS Carriage Bolt	10
11	503-3101	5/16” - 18 x 1/2” Hex Bolt	12

ITEM	PART #	DESCRIPTION	QTY
12	503-3103	5/16” - 18 x 3/4” HHCS Bolt	3
13	503-3108	5/16” - 18 x 1-3/4” HHCS Hex Bolt G2	1
14	504-2503	1/4” - 20 USS Nylock Nut	10
15	504-2506	1/4” Hex Lock Nut “Thin” L/N Steel Zinc	12
16	504-3103	5/16” - 18 Nylock Nut Steel Zinc	1
17	504-5001	1/2” Crimp Nut	1
18	505-2502	1/4” USS Washer 5/16” Hole	35
19	505-3102	5/16” Lock Washer	15
20	505-5001	1/2” AN Washer 1/16” Thick	1
21	517-0906	1.1HP 12V DC Electric Motor	1
--	517-0909	1.3HP 12V DC Electric Motor	1

REV. 06/21/19 WLH

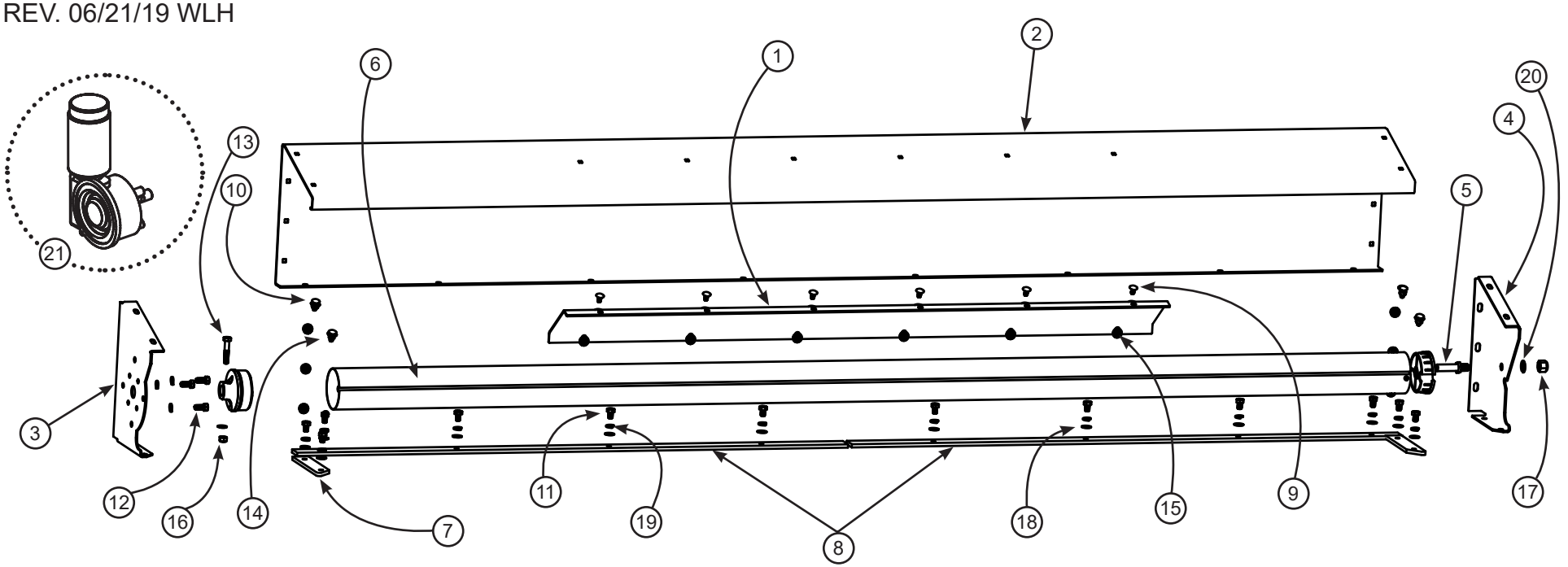

SuperShield™ 9500E #210-0215

ITEM	PART #	DESCRIPTION	QTY
1	501-01XX	9.5" Super Shield Hsg. 80, 84, 87, 89, 93, 96, 100"	1
2	501-13XX	Roller Tube Assy. 80, 84, 87, 89, 93, 96, 100"	1
3	501-15XX	Mounting Bar 40, 42, 43.5, 44.5, 46.5, 48, 50" (Specify Steel or Aluminum)	2
4	505-2502	1/4" Flat Washer USS	1
5	503-3108	5/16" - 18 x 1-3/4"lg. HHCS Bolt	1
6	503-3105	5/16" - 18 x 1"lg. HHCS Bolt	3
7	503-3101	5/16" - 18 x 1/2"lg. HHCS Bolt	12
8	505-3102	5/16" Lock Washer	15
9	504-3103	5/16" - 18 Nyloc Nut	1
10	506-9905	#10 - 32 x 1/2"lg. Phillips Head Pan	4
11	501-9915	Roller Drive Aluminum End Cap	1
12	517-0102	Flanged End Cap	1
13	506-9916	Screw #8 - 18 x 3/4" Self Drilling	1
14	501-0632	System End Plate Stud Kit	1
15	501-1235	Aluminum Adaptor Plate - SW Motor	1
16	501-150X	6" Large Mounting Bar (Specify Stell or Aluminum)	2
17	517-0906	12V DC Electric Motor 1.1HP	1
--	517-0909	12V DC Electric Motor 1.3HP	--
18	607-0061	Pulltarps Decal	1

REV. 04/24/19 WLH

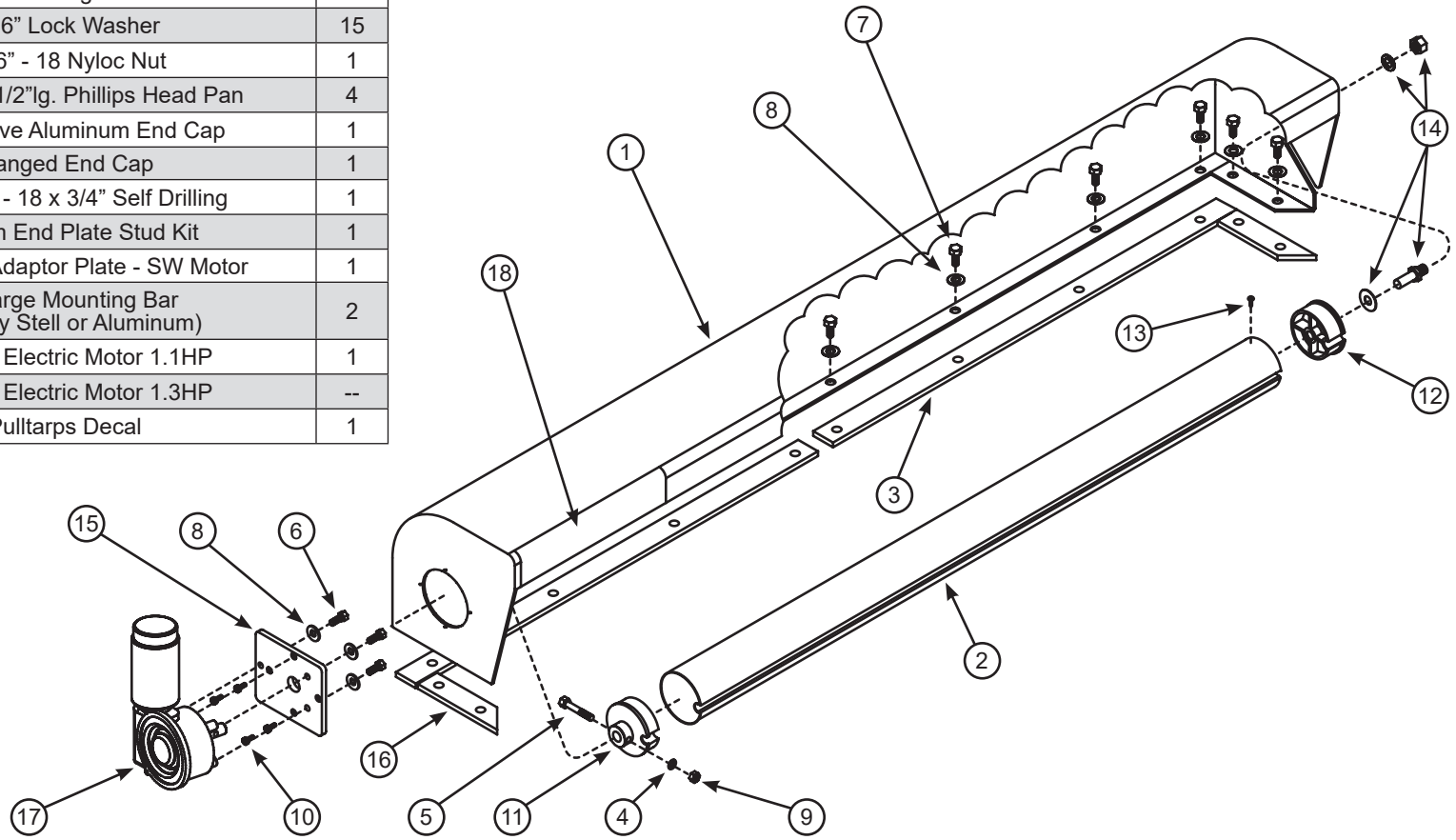

X-Pando (Adjustable) #218-0215

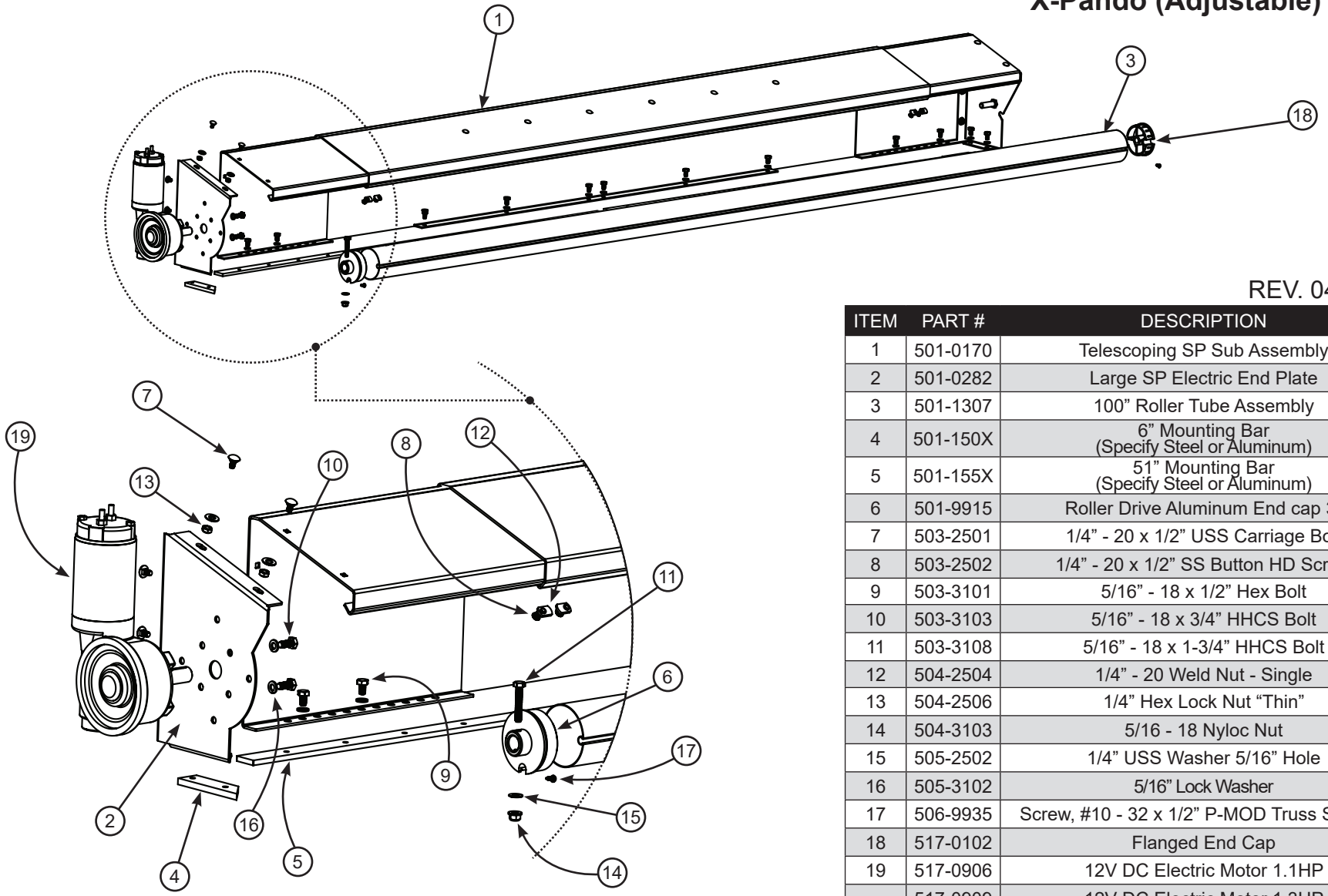

REV. 04/18/19 WLH

ITEM	PART #	DESCRIPTION	QTY
1	501-0170	Telescoping SP Sub Assembly	1
2	501-0282	Large SP Electric End Plate	1
3	501-1307	100” Roller Tube Assembly	1
4	501-150X	6” Mounting Bar (Specify Steel or Aluminum)	2
5	501-155X	51” Mounting Bar (Specify Steel or Aluminum)	2
6	501-9915	Roller Drive Aluminum End cap 3”	1
7	503-2501	1/4” - 20 x 1/2” USS Carriage Bolt	5
8	503-2502	1/4” - 20 x 1/2” SS Button HD Screw	4
9	503-3101	5/16” - 18 x 1/2” Hex Bolt	14
10	503-3103	5/16” - 18 x 3/4” HHCS Bolt	3
11	503-3108	5/16” - 18 x 1-3/4” HHCS Bolt	1
12	504-2504	1/4” - 20 Weld Nut - Single	4
13	504-2506	1/4” Hex Lock Nut “Thin”	5
14	504-3103	5/16 - 18 Nyloc Nut	1
15	505-2502	1/4” USS Washer 5/16” Hole	6
16	505-3102	5/16” Lock Washer	17
17	506-9935	Screw, #10 - 32 x 1/2” P-MOD Truss Self Drl.	3
18	517-0102	Flanged End Cap	1
19	517-0906	12V DC Electric Motor 1.1HP	1
--	517-0909	12V DC Electric Motor 1.3HP	--

High Mount Extended Reach Arm System #501-1766 (With Wire)
#501-1767 (No Wire)

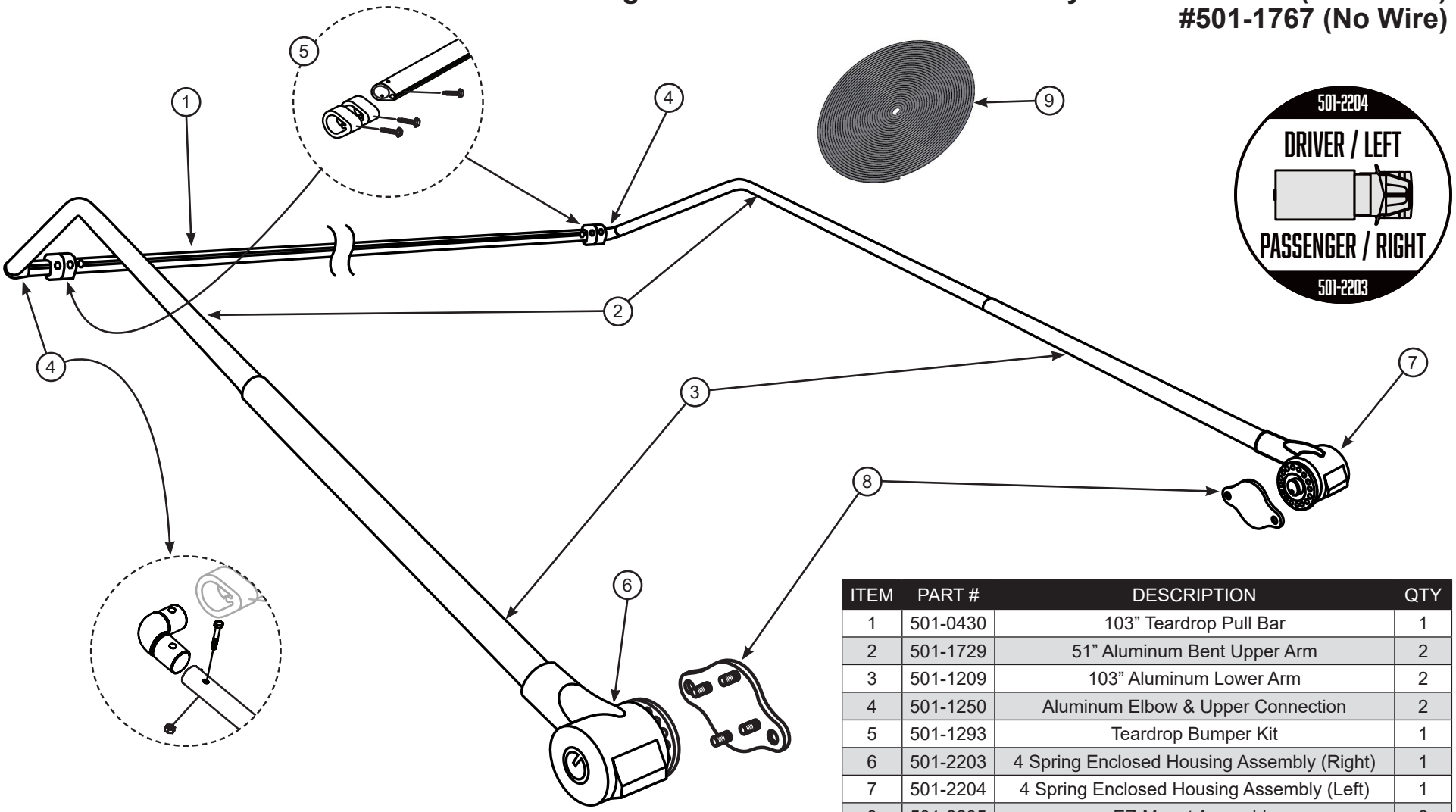

ITEM	PART #	DESCRIPTION	QTY
1	501-0430	103” Teardrop Pull Bar	1
2	501-1729	51” Aluminum Bent Upper Arm	2
3	501-1209	103” Aluminum Lower Arm	2
4	501-1250	Aluminum Elbow & Upper Connection	2
5	501-1293	Teardrop Bumper Kit	1
6	501-2203	4 Spring Enclosed Housing Assembly (Right)	1
7	501-2204	4 Spring Enclosed Housing Assembly (Left)	1
8	501-2235	EZ-Mount Assembly	2
9	514-0122	6GA. Wire 80’ Long (For 501-1766)	1

Illustration view shown looking from passenger side to rear of vehicle.

REV. 08/21/19 WLH

EZ-Mount 4 Spring Arm System #501-1768 (With Wire)
#501-1769 (No Wire)

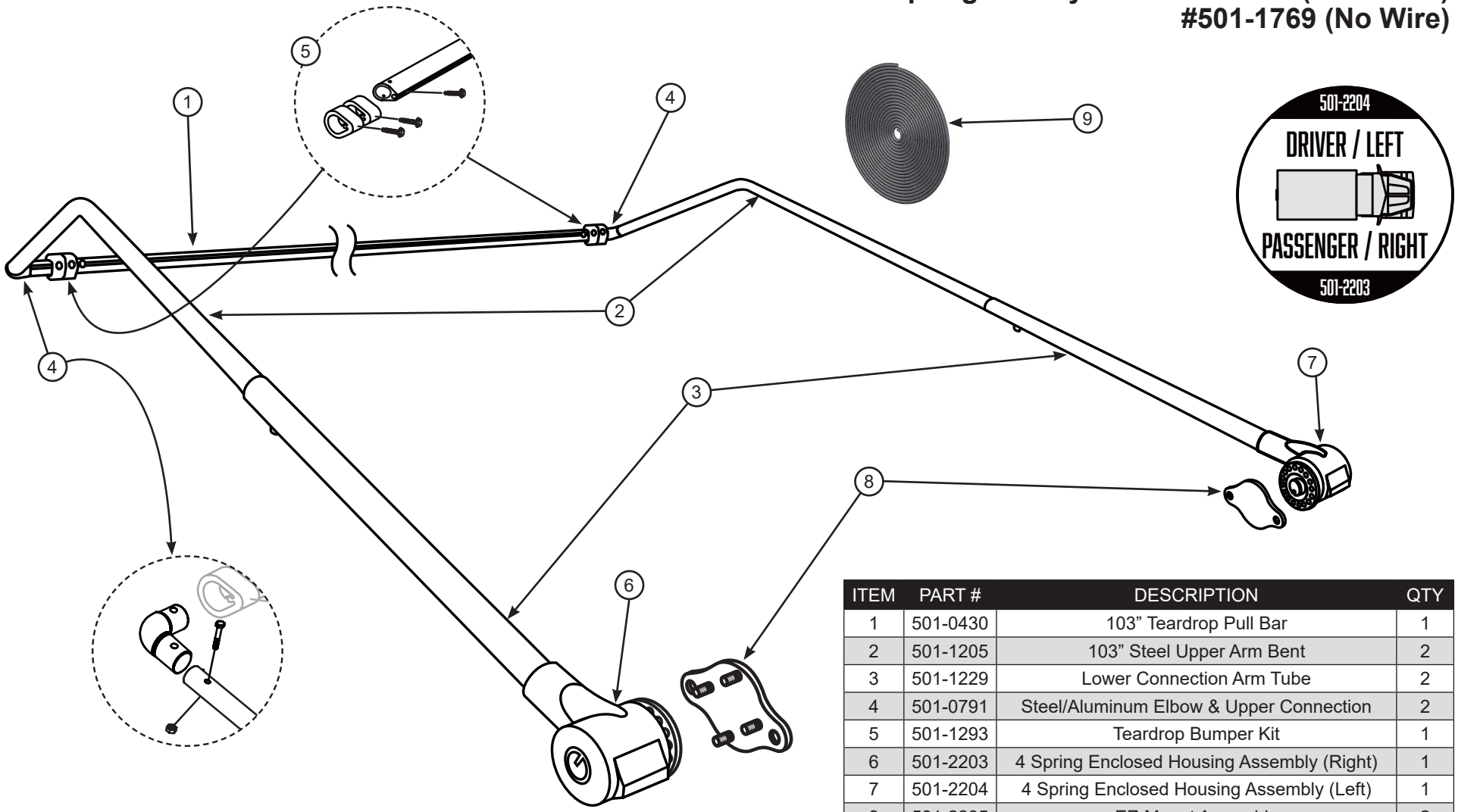

ITEM	PART #	DESCRIPTION	QTY
1	501-0430	103” Teardrop Pull Bar	1
2	501-1205	103” Steel Upper Arm Bent	2
3	501-1229	Lower Connection Arm Tube	2
4	501-0791	Steel/Aluminum Elbow & Upper Connection	2
5	501-1293	Teardrop Bumper Kit	1
6	501-2203	4 Spring Enclosed Housing Assembly (Right)	1
7	501-2204	4 Spring Enclosed Housing Assembly (Left)	1
8	501-2235	EZ-Mount Assembly	2
9	514-0121	6GA. Wire 70’ Long (For 501-1768)	1

Illustration view shown looking from passenger side to rear of vehicle.

REV. 08/21/19 WLH

4 Spring Enclosed Housing Assembly Right #501-2204 & Left #501-2203

ITEM	PART #	DESCRIPTION	QTY
1	501-1162	Washer 1-7/8" x 1-1/4" Narrow Rim Bushing	2
2	501-2122	UHMW Enclosed Spring End Cap	2
3	501-2210	Enclosed 4 Spring Housing	1
4	501-2242	Steel Adjustable Enclosed 4 Spring Pivot Only	1
5	503-3712	3/8" - 16 x 3" Hex Head Bolt	1
6	504-3702	3/8" - 16 Nyloc Hex Nut Zinc Plt	1
7	506-0101	1-1/4" Snap Ring	2
8	517-9966	Spring, Underbody Arm System	4

REV. 12/21/17 WLH

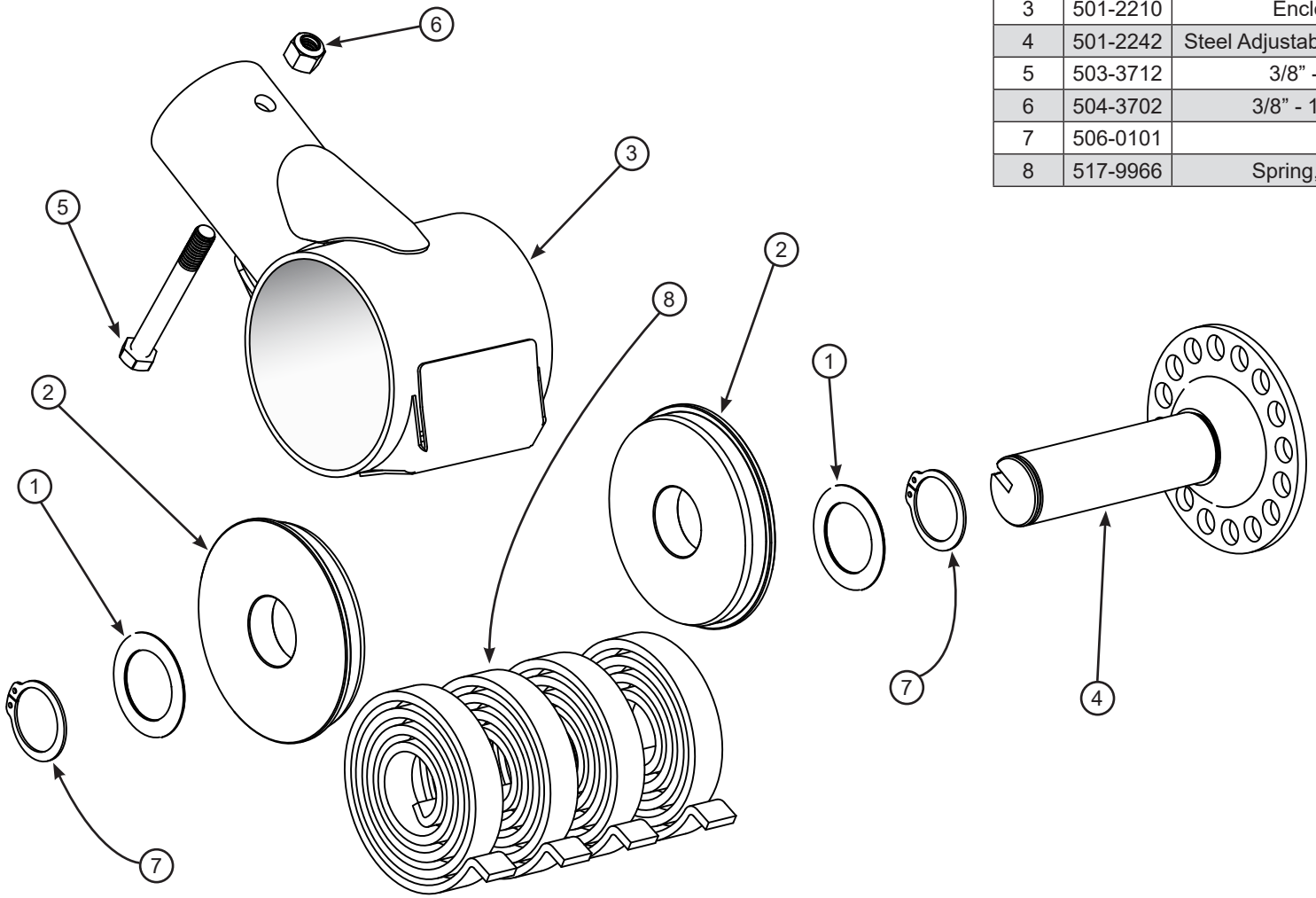

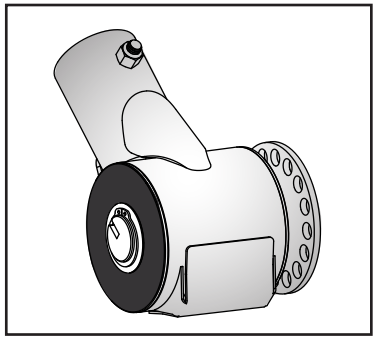

Assembled View

Rear Transfer Inside Arm System #501-1780

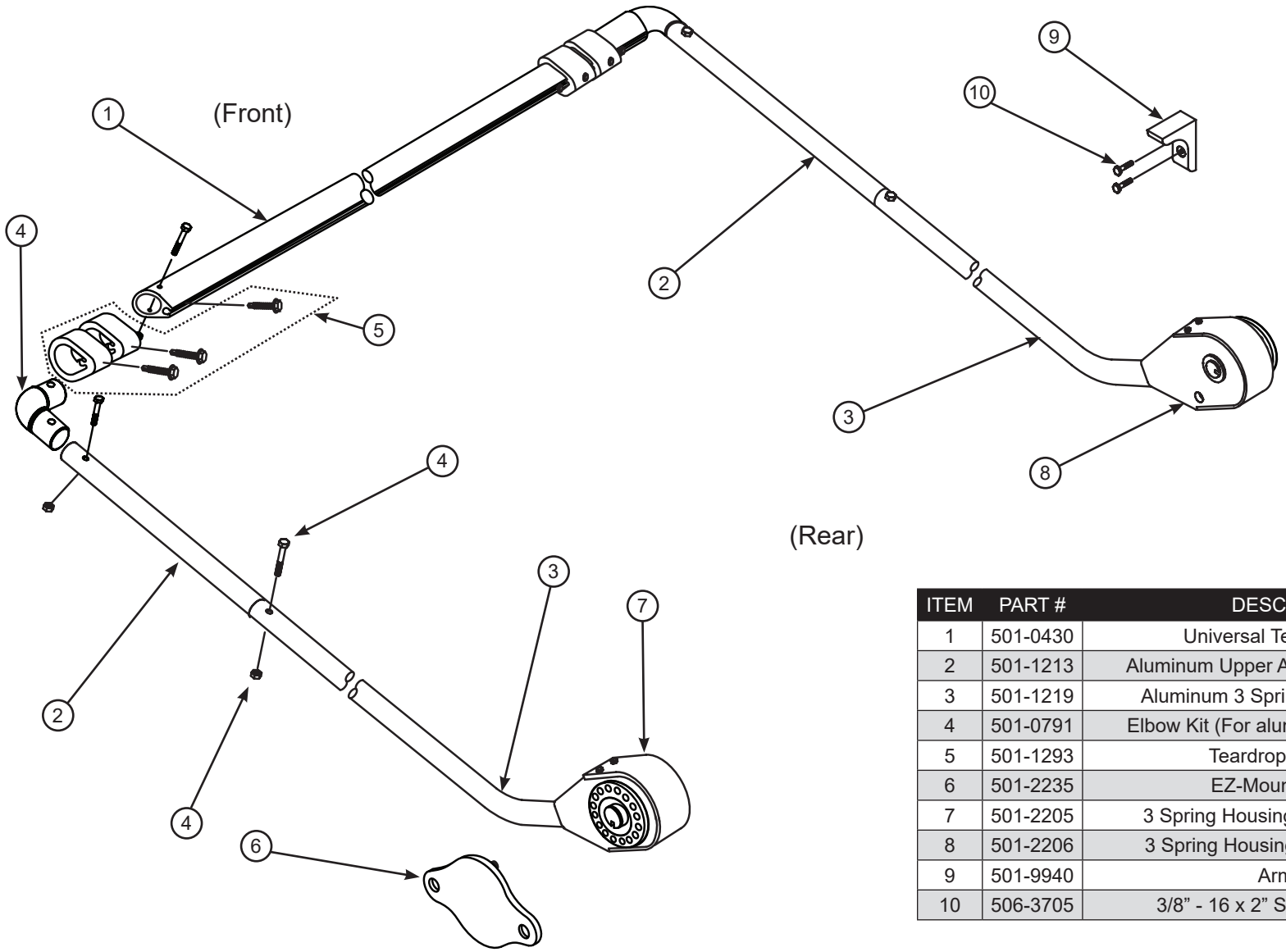

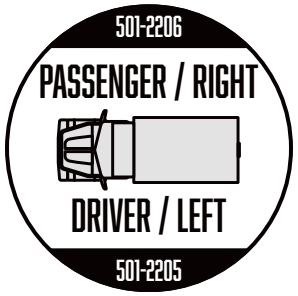

ITEM	PART #	DESCRIPTION	QTY
1	501-0430	Universal Teardrop Pullrod	1
2	501-1213	Aluminum Upper Arm Tubing, 51-3/8”lg.	2
3	501-1219	Aluminum 3 Spring Arm Tube, 55”lg.	2
4	501-0791	Elbow Kit (For aluminum with Teardrop)	2
5	501-1293	Teardrop Bumper Kit	1
6	501-2235	EZ-Mount Assembly	2
7	501-2205	3 Spring Housing Assembly (Driver)	1
8	501-2206	3 Spring Housing Assembly (Pass.)	1
9	501-9940	Arm Stop	2
10	506-3705	3/8” - 16 x 2” Self Tapping Screw	4

REV. 08/21/19 WLH

High Mount Arm System #501-1781

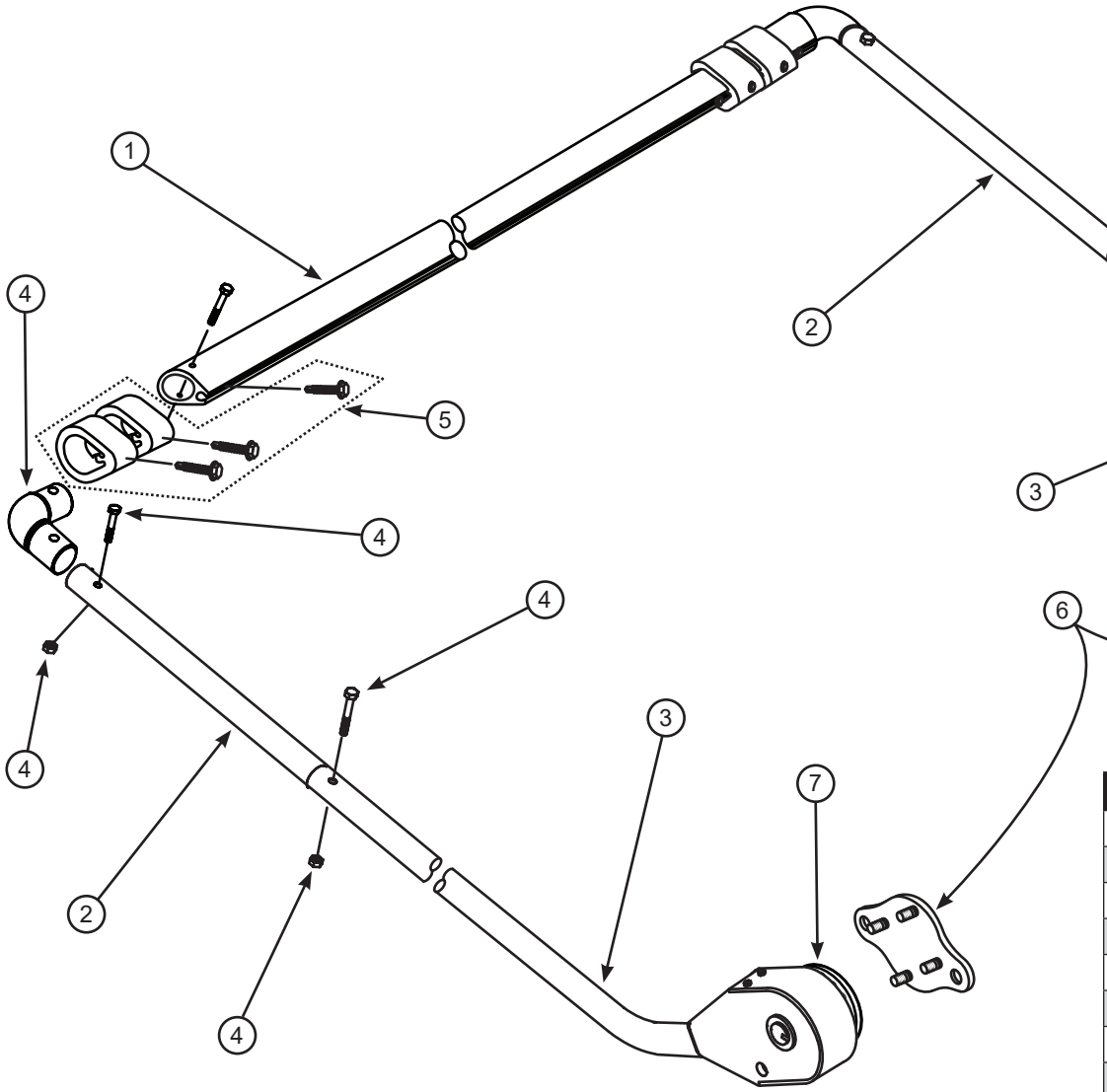

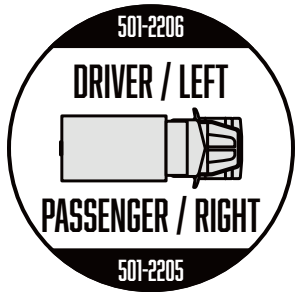

ITEM	PART #	DESCRIPTION	QTY
1	501-0430	Universal Teardrop Pullrod	1
2	501-1213	Aluminum Upper Arm Tubing, 51-3/8"lg.	2
3	501-1219	Aluminum 3-Spring Arm Tube, 55"lg.	2
4	501-0791	Elbow Kit (For aluminum with Teardrop)	2
5	501-1293	Teardrop Bumper Kit	1
6	501-2235	EZ-Mount Assembly	1
7	501-2205	3 Spring Housing Assembly (Passenger)	1
8	501-2206	3 Spring Housing Assembly (Driver)	1

REV. 08/13/19 WLH

Inside Transfer / Hight Mount 3 Spring Housing Assembly
#501-2205(Driver-Opposite), 501-2206 (Pass.-Shown)

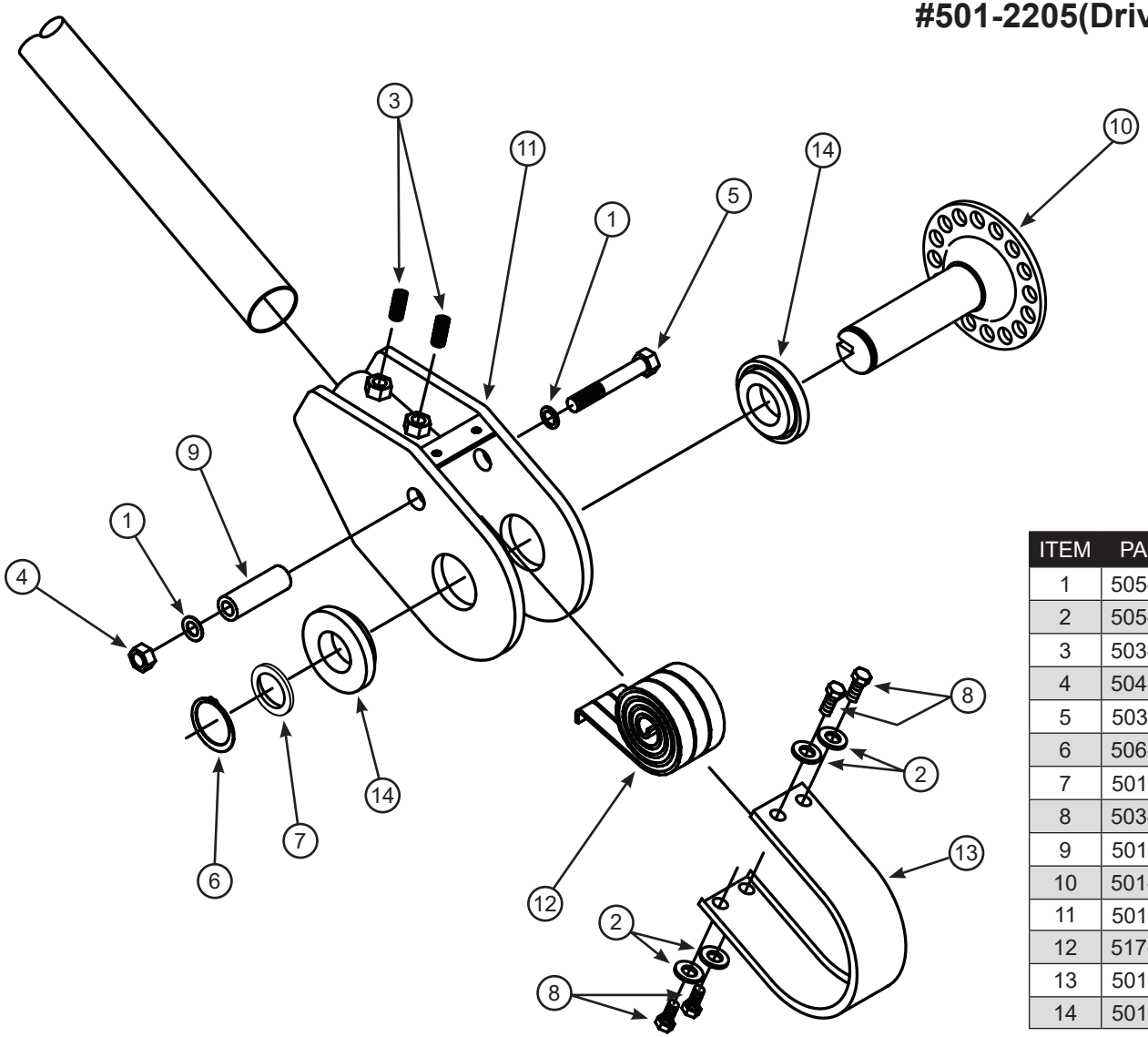

ITEM	PART #	DESCRIPTION	QTY
1	505-5001	1/2” AN Flat Washer	2
2	505-2502	1/4” Flat Washer USS	4
3	503-5008	1/2” - 13 x 3/4” Set Screw	2
4	504-5004	1/2” - 13 Nyloc Nut	1
5	503-5011	1/2” - 13 x 3-1/4”lg. HHCS Bolt	1
6	506-0101	1-1/4” Snap Ring	1
7	501-1162	Washer, 1-7/8” x 1-1/4” Narrow Rim Bush	1
8	503-2503	1/4” - 20 x 1/2”lg. HHCS Bolt	4
9	501-1158	Spring Connection - Arm System	1
10	501-2243	Steel Adjustable 3 & 4 Spring Pivot Only	1
11	501-1109	Spring Side Plate Assembly	1
12	517-9921	Small Spring for Arm System	3
13	501-1151	Arm Dust Cover	1
14	501-1155	UHMW Pivot Retainer 2-1/2” Dia.	2

REV. 04/18/19 WLH

Steel Arms to 22' #501-1756, 501-1755

ITEM	PART #	DESCRIPTION	QTY
1	501-1293	Teardrop Bumper Kit	1
2	501-1251	Elbow Kit (For Steel)	1
3	501-2207	4 Spring Housing (Driver Side)	1
4	501-2208	4 Spring Housing (Pass. Side)	1
5	501-0430	Universal Teardrop Pullrod	1
6	506-5008	1/2" - 13 x 3/4"lg. Set Screw	4
7	501-2235	EZ-Mount Assembly	1
--	514-0120	6 Ga. Electric Wire	60'

Arm Options

ITEM	PART #	DESCRIPTION	QTY
8	501-1202	Steel Upper Arm Tubing (Included in 501-0782)	2
9	501-1205	Upper Arm Tubing, Drilled and Bent (Included in 501-0749)	2
10	501-1207	Offset Upper Arm Tube	2

REV. 08/21/19 WLH

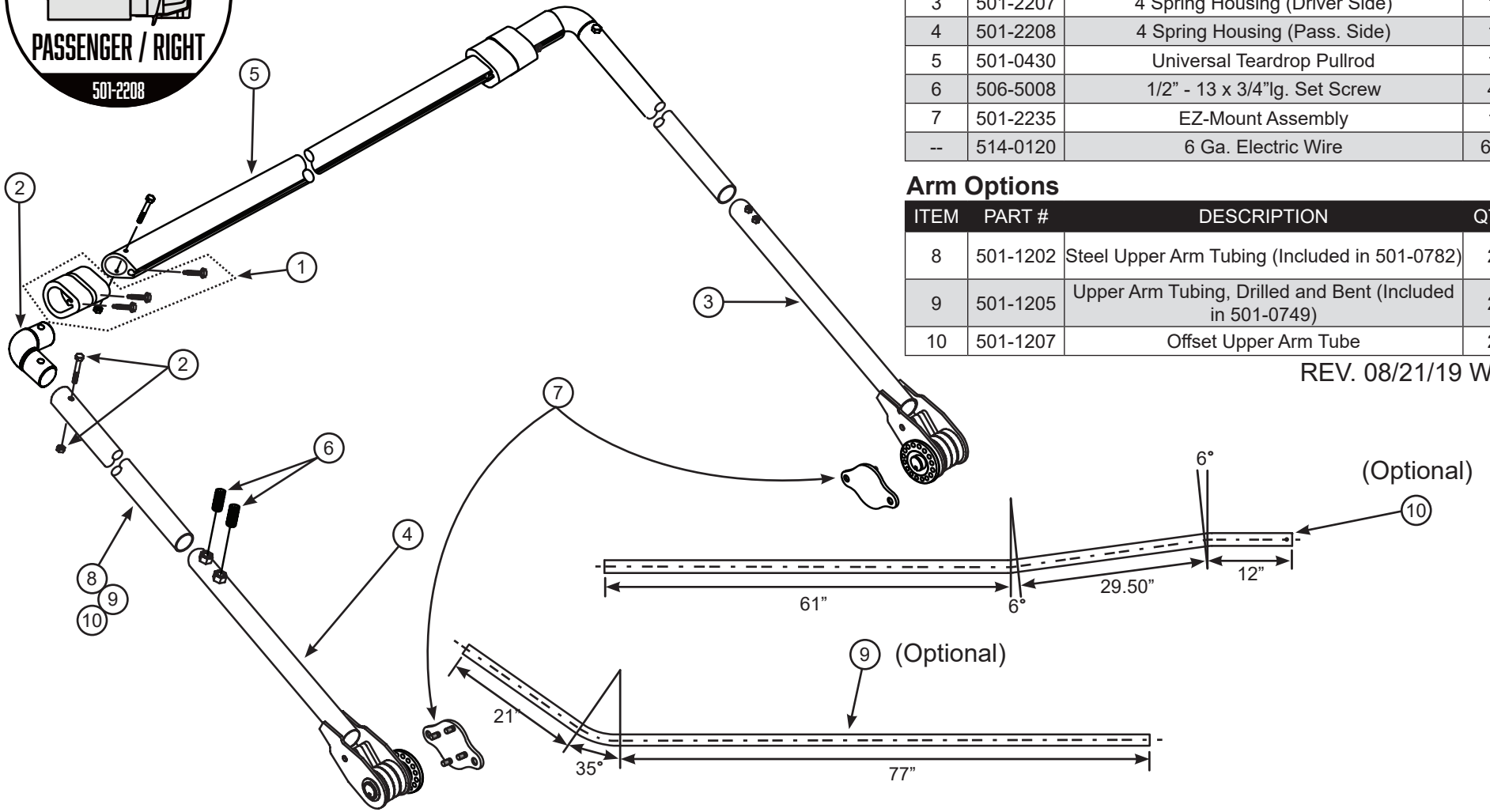

Steel Arms to 22' #501-1703, 501-1704

ITEM	PART #	DESCRIPTION	QTY
1	501-1293	Teardrop Bumper Kit	1
2	501-1251	Elbow Kit (For Steel)	1
3	501-2207	4 Spring Housing (Driver Side)	1
--	501-1253	Steel Offset 4 Spring Hsg. (Driver Side)	1
4	501-2208	4 Spring Housing (Pass. Side)	1
--	501-1254	Steel Offset 4 Spring Hsg. (Pass. Side)	1
5	501-2235	EZ-Mount Assembly	1
6	501-0430	Universal Teardrop Pullrod	1
7	506-5008	1/2" - 13 x 3/4"lg. Set Screw	4
--	514-0120	6 Ga. Electric Wire	60'

Arm Options

ITEM	PART #	DESCRIPTION	QTY
8	501-1202	Steel Upper Arm Tubing	2
9	501-1205	Upper Arm Tubing, Drilled and Bent	2
10	501-1207	Offset Upper Arm Tube	2

REV. 08/21/19 WLH

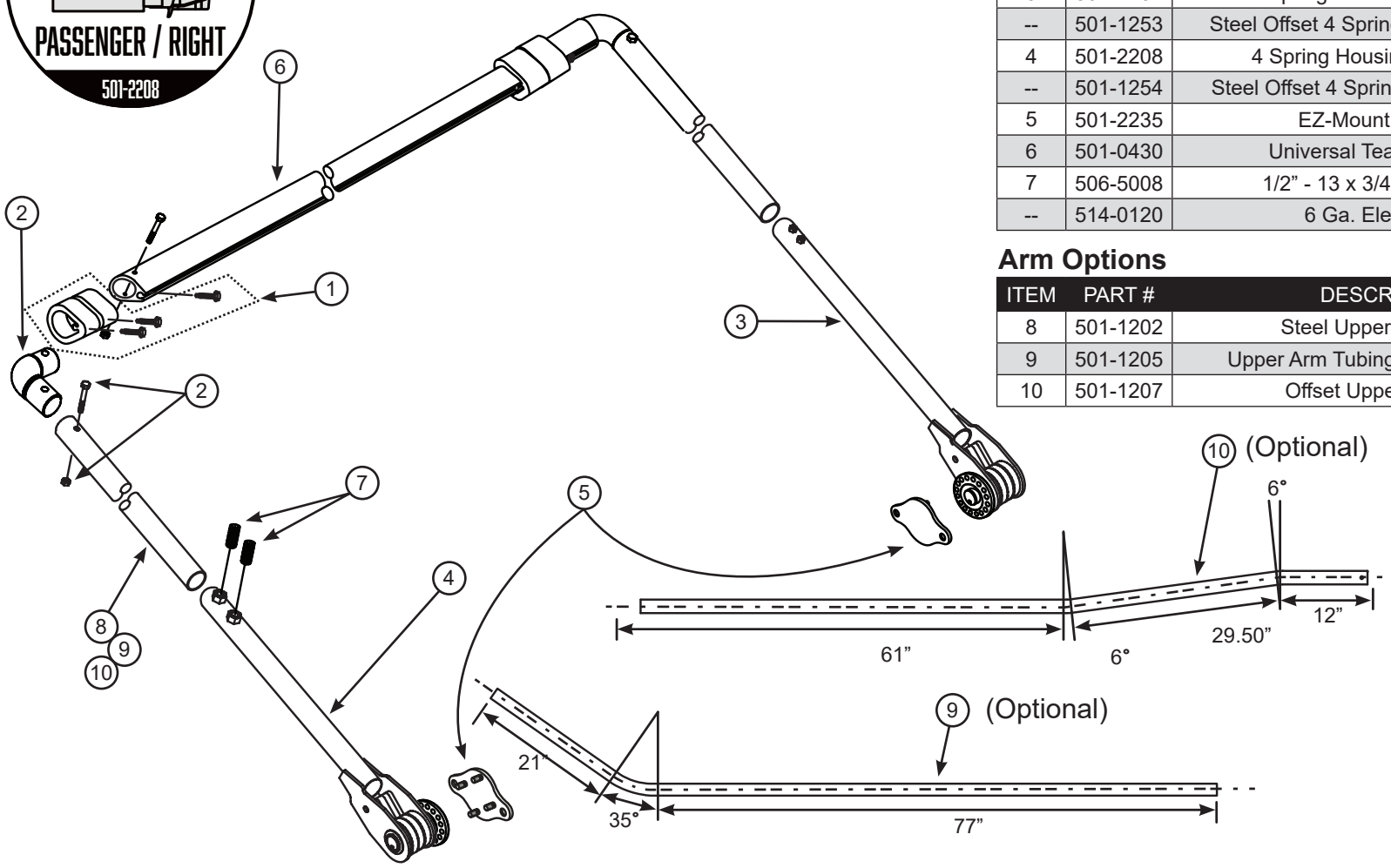

4 Spring Housing Assembly
#501-2207 (Driver-Opposite), 501-2208 (Pass.-Shown)

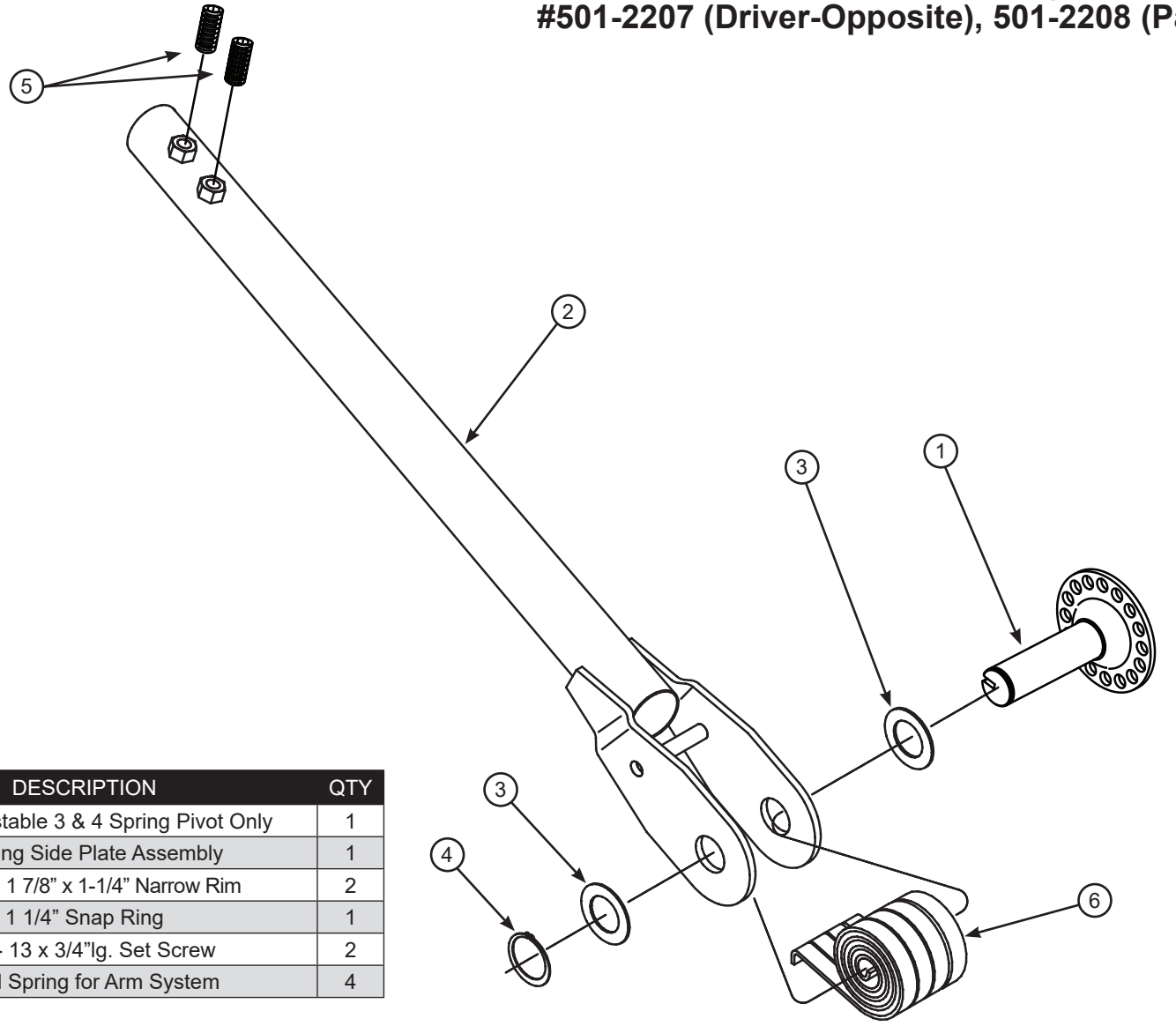

ITEM	PART #	DESCRIPTION	QTY
1	501-2243	Steel Adjustable 3 & 4 Spring Pivot Only	1
2	501-1110	4 Spring Side Plate Assembly	1
3	501-1162	Washer, 1 7/8” x 1-1/4” Narrow Rim	2
4	506-0101	1 1/4” Snap Ring	1
5	503-5008	1/2” - 13 x 3/4”lg. Set Screw	2
6	517-9921	Small Spring for Arm System	4

REV. 04/12/19 WLH

Single Spring Pivots with Steel Arms #501-0713, 501-1763

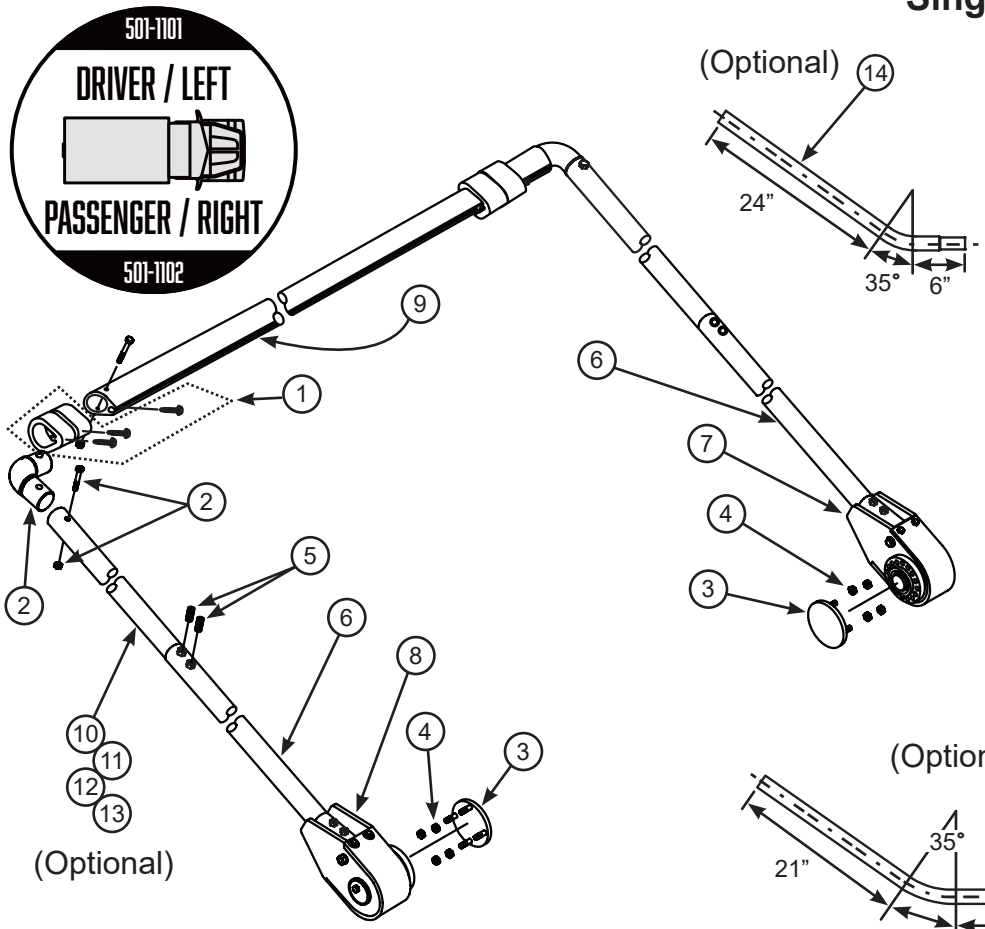

ITEM	PART #	DESCRIPTION	QTY
1	501-1293	Teardrop Bumper Kit	1
2	501-1251	Elbow Kit (For Steel)	1
3	501-2237	4” Arm Adaptor Plate Assembly	2
4	504-3705	3/8” - 16 Nyloc Nut (Thin)	8
5	506-5008	1/2” - 13 x 3/4”lg. Set Screw	4
6	501-1201	Lower Arm with Nuts	2
7	501-1101	Single Spring Housing (Driver)	1
8	501-1102	Single Spring Housing (Passenger)	1
9	501-0430	Universal Teardrop Pullbar	1
--	514-0213	6Ga. Electric Wire	90’

Arm Options

ITEM	PART #	DESCRIPTION	QTY
10	501-1202	Steel Upper Arm Tubing	2
11	501-1204	Offset Upper Arm Tube	2
12	501-1205	Upper Arm Tubing, Drilled and Bent	2
13	501-1207	Offset Upper Arm Tube	2
14	501-1230	Upper Arm Extension, Bent-35°	2
15	501-1243	Right Offset Lower Arm Tube	1
16	501-1244	Left Offset Lower Arm Tube	1

REV. 08/21/19 WLH

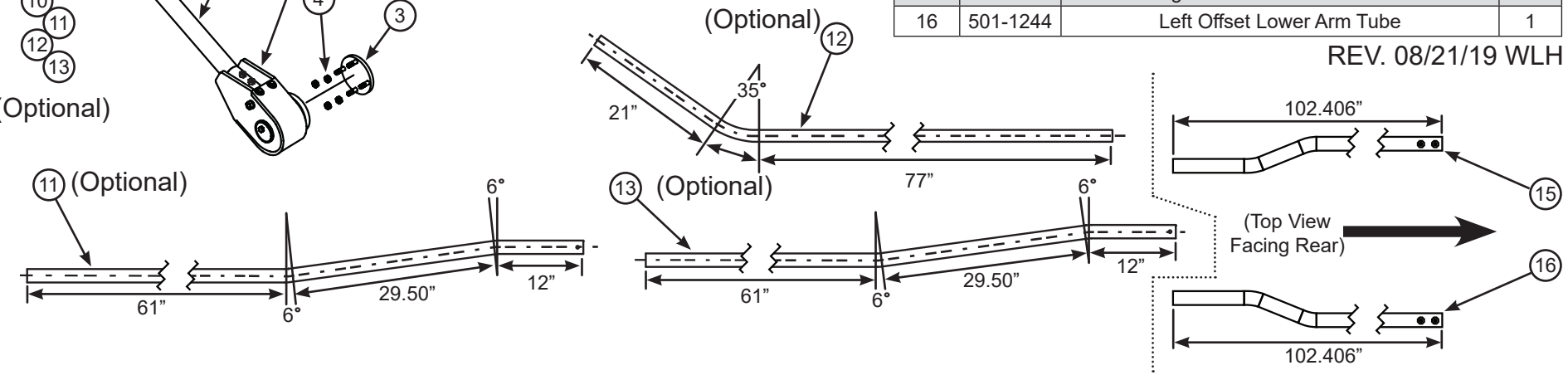

Single Spring Pivots w/Aluminum Arms #501-0714, 501-0731, 501-1764, 501-1765 (No Wire) #501-0764, 501-0765, 501-0785, 501-0786 (With Wire 90' & 100')

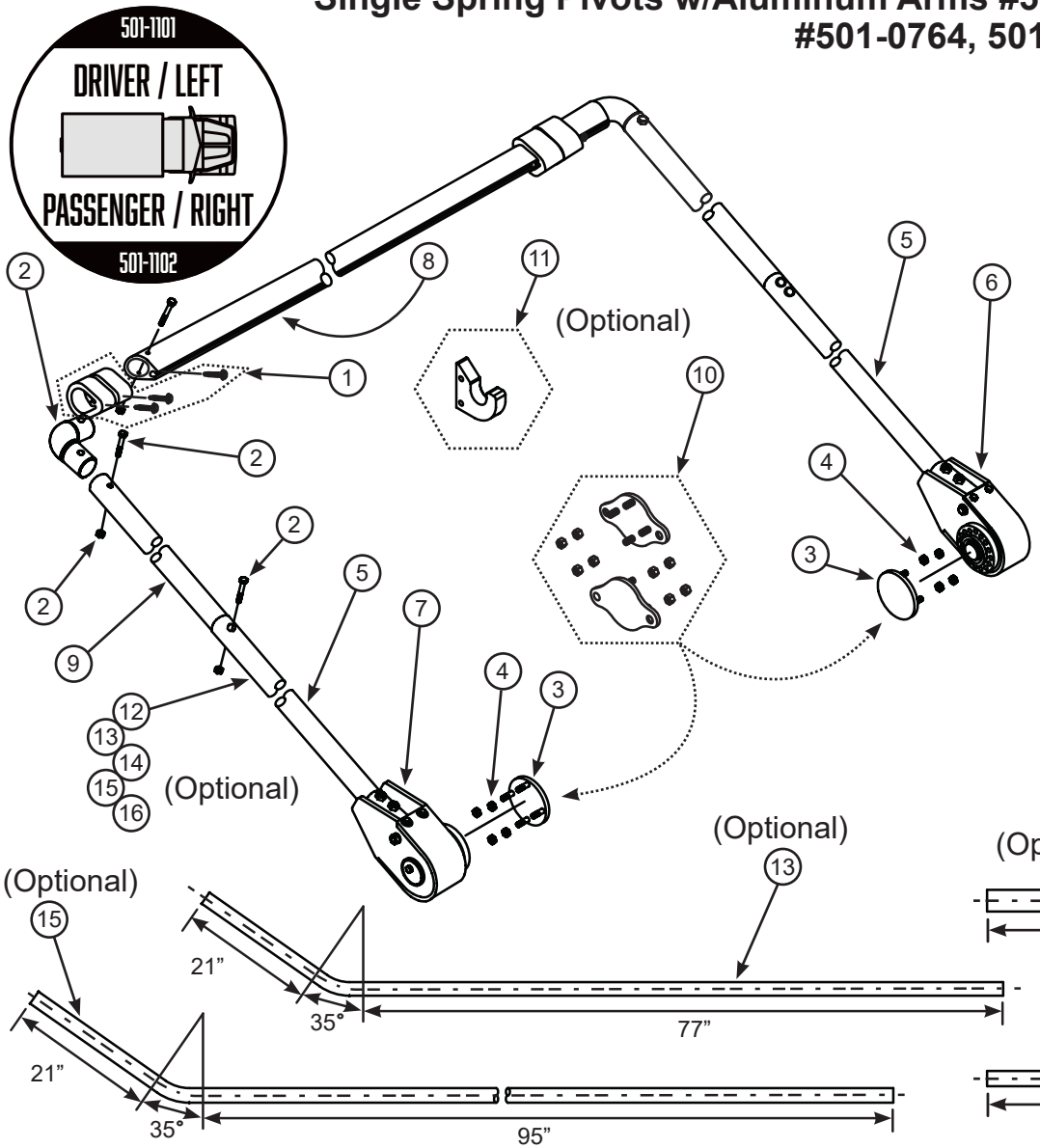

ITEM	PART #	DESCRIPTION	QTY
1	501-1293	Teardrop Bumper Kit	1
2	501-0791	Elbow Kit (For Alum. with Teardrop)	1
3	501-2237	4" Arm Adaptor Plate Assembly	2
4	504-3705	3/8" - 16 Nyloc Nut (Thin)	8
5	501-1209	Aluminum Lower Arm Tube	2
6	501-1101	Single Spring Housing (Driver)	1
7	501-1102	Single Spring Housing (Passenger)	1
8	501-0430	Universal Teardrop Pullbar	1

Options

ITEM	PART #	DESCRIPTION	QTY
9	501-1211	Aluminum Upper Arm or Pullrod	2
10	501-2235	EZ-Mount Assembly	2
11	501-1247	Arm Catcher Assembly (Optional)	1
12	501-1210	Aluminum Lower Offset Arm Tube	2
13	501-1214	Upper Arm Tubing, Drilled and Bent	2
14	501-1215	Aluminum Offset Upper Arm Tube	2
15	501-1216	Aluminum Upper Arm Tube Bent - 10'	2
16	501-1212	Aluminum Upper Arm Tube - 10'	2

REV. 08/21/19 WLH

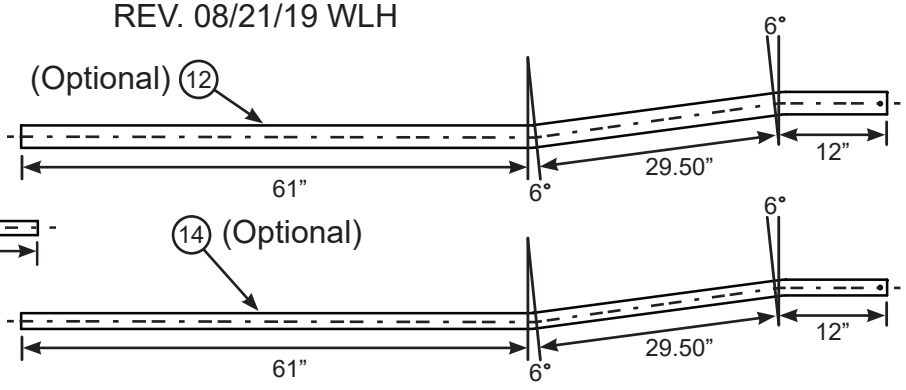

Single Spring Housing Assembly
#501-1101 (Driver-Shown), #501-1102 (Pass.-Opposite)

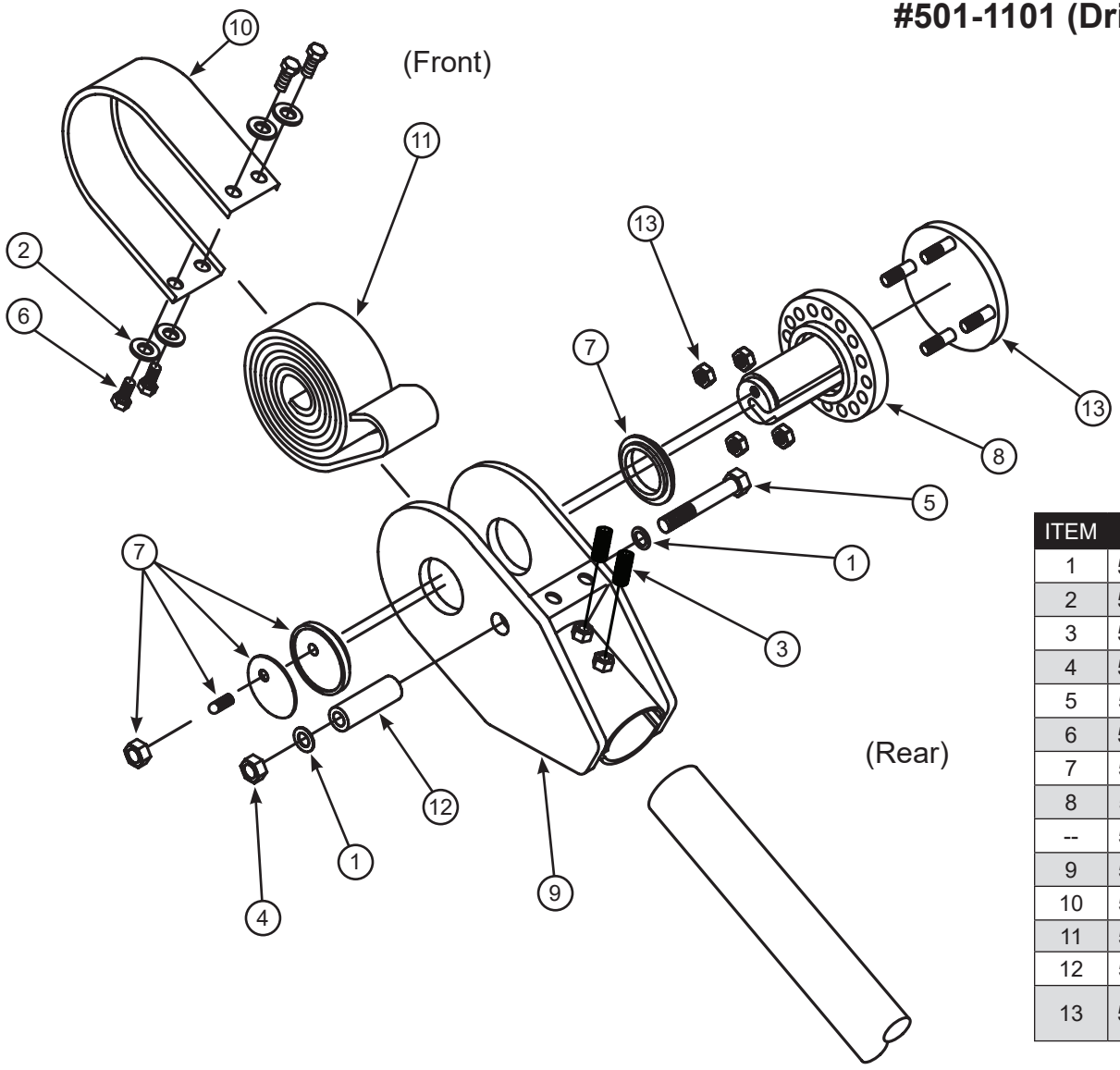

ITEM	PART #	DESCRIPTION	QTY
1	505-5001	1/2” AN Flat Washer	2
2	505-2502	1/4” Flat Washer USS	4
3	506-5008	1/2” - 13 x 3/4” Set Screw	2
4	504-5004	1/2” - 13 Nyloc Nut	1
5	503-5011	1/2” - 13 x 3-1/4”lg. HHCS Bolt	1
6	503-2503	1/4” - 20 x 1/2”lg. HHCS Bolt	4
7	501-1181	Bushing Kit	1
8	501-1119	Pivot Assembly (Driver)	1
--	501-1120	Pivot Assembly (Passenger-Not Shown)	1
9	501-1109	Spring Side Plate Assembly	1
10	501-1151	Arm Dust Cover	1
11	501-1156	Rolled Spring Assembly with Strip	1
12	501-1158	Spring Connection (Arm System)	1
13	501-2237	4” Arm Adaptor Plate Assembly (Not part of Kit - Must be ordered separately.)	1

REV. 10/13/16 WLH

34” Steel Offset Arm #501-1203 (Left), 501-1204 (Right)

(Left Offset Arm Shown)

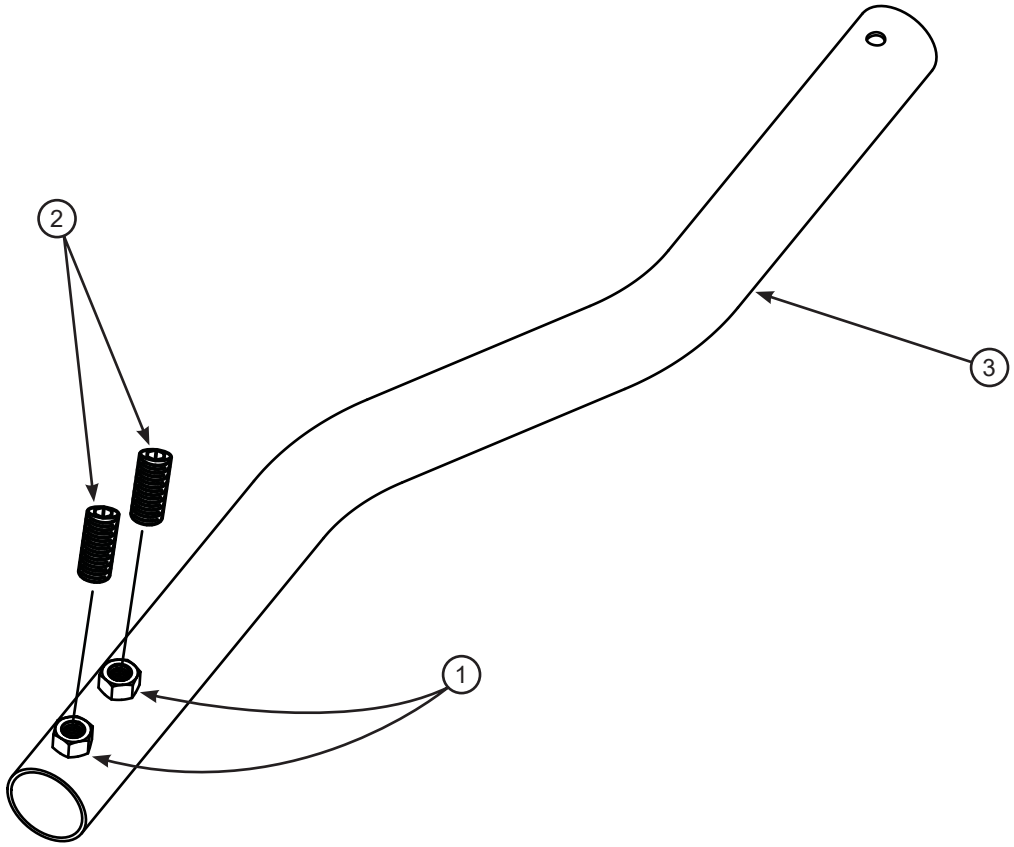

ITEM	PART #	DESCRIPTION	QTY
1	504-5003	1/2” - 13 Nut - Unplated	2
2	506-5008	1/2” - 13 x 3/4” Set Screw	2
3	517-0343	Tubing, Galvanized 1.9X .090X	1

REV. 04/12/19 WLH

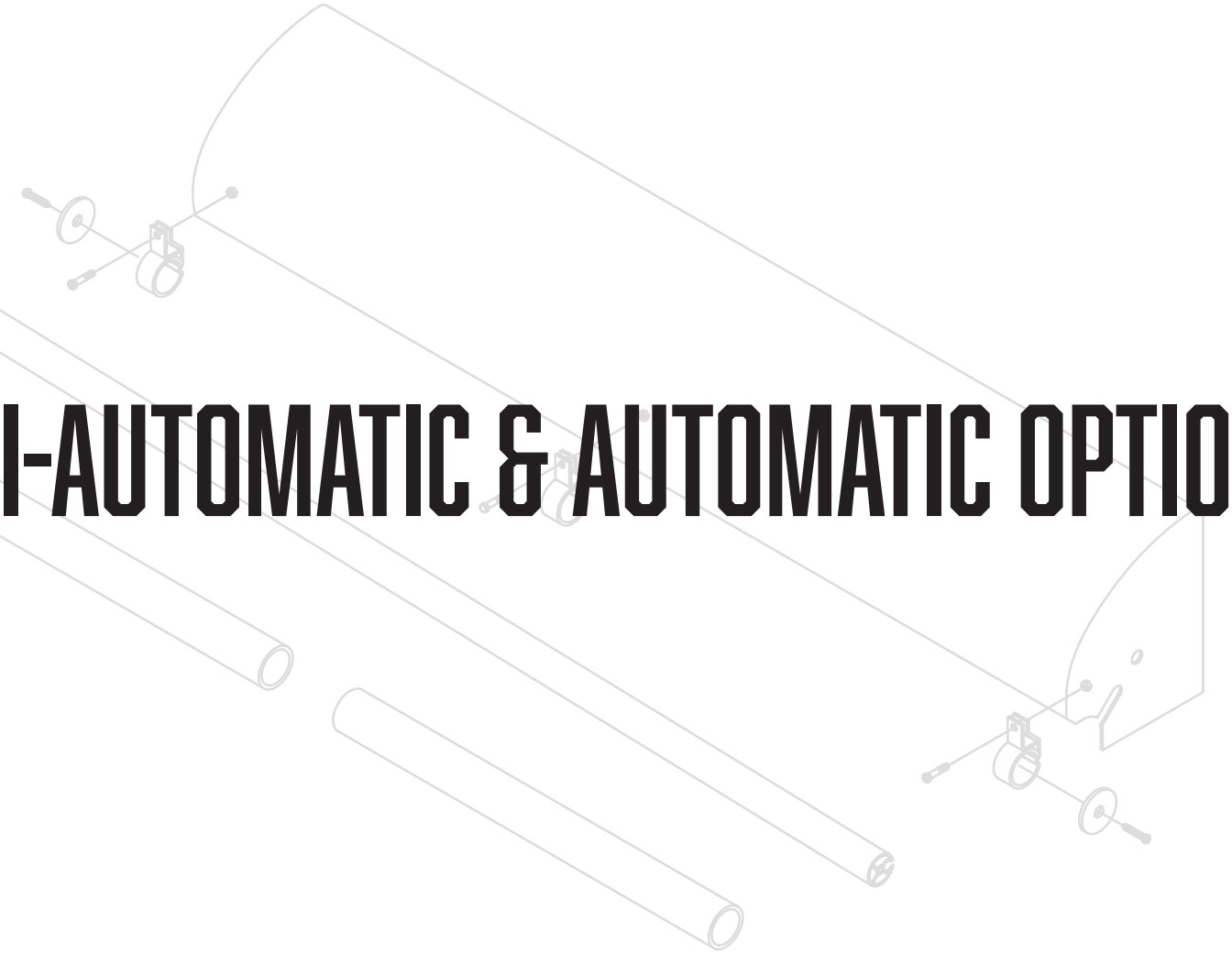

SEMI-AUTOMATIC & AUTOMATIC OPTIONS

Tarp Tamer # 501-0701

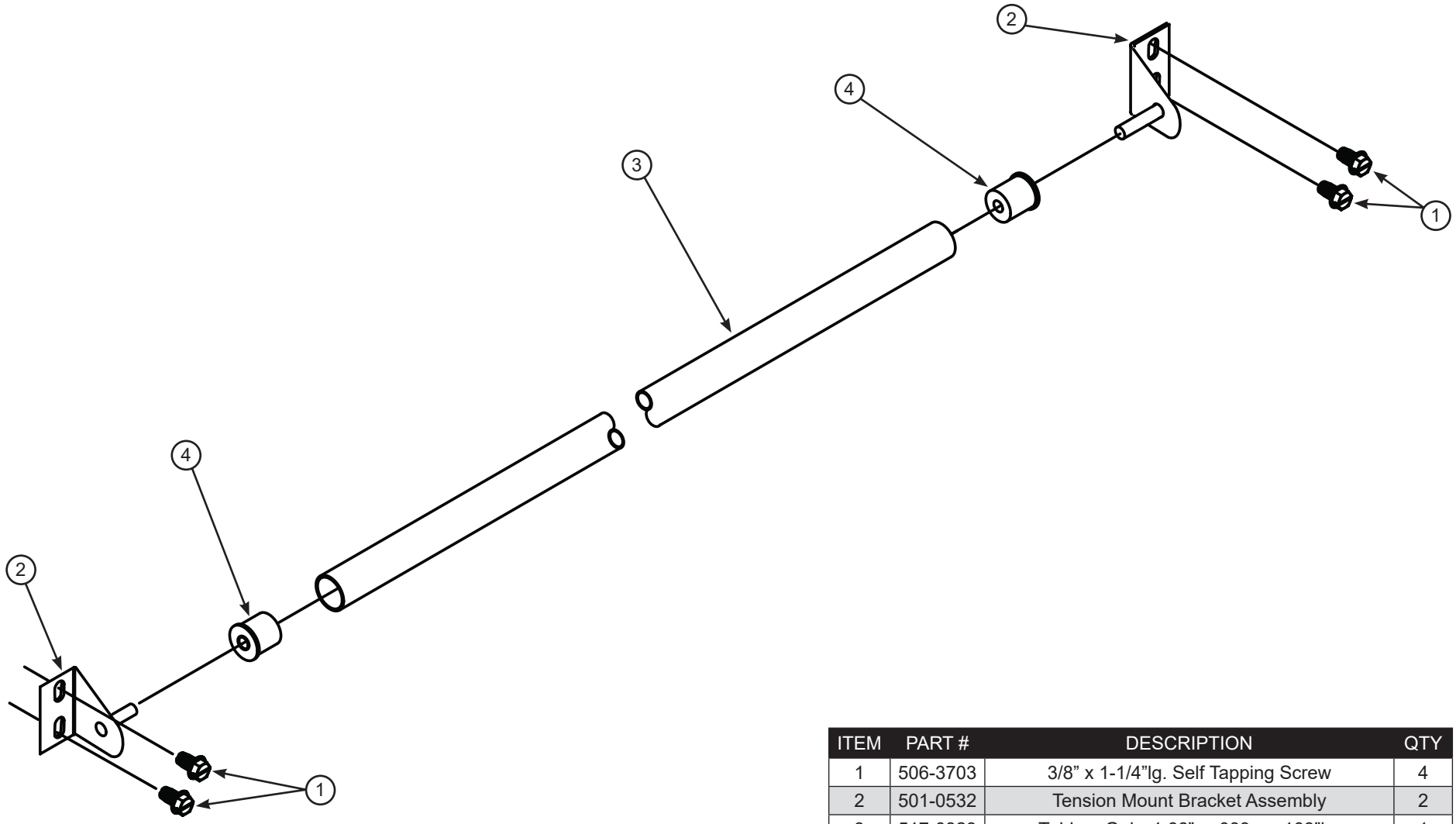

ITEM	PART #	DESCRIPTION	QTY
1	506-3703	3/8” x 1-1/4”lg. Self Tapping Screw	4
2	501-0532	Tension Mount Bracket Assembly	2
3	517-0323	Tubing, Galv. 1.66” x .083w x 103”lg.	1
4	501-9939	UHMW Bushing, Tarp Tamer	2

REV. 03/11/10 NB

S8 Roller Conversion #501-070X

(80, 84, 87, 89, 93, 96, 100")

ITEM	PART #	DESCRIPTION	QTY
1	517-0614	Pullrod (Cut to Size)	1
2	517-0106	1-1/4" Grey PVC (Cut to Size)	2
3	501-0507	Bracket for 8" Arm Roller Assembly	3
4	505-2505	1/4" x 2" Fender Washer	2
5	506-2502	1/4" - 20 x 1"lg. Slotted Head Cap Screw	2
6	503-2503	1/4" - 20 x 1/2"lg. HHCS Bolt	3
7	504-2506	1/4" - 20 Nyloc Nut	3

REV. 10/24/16 WLH

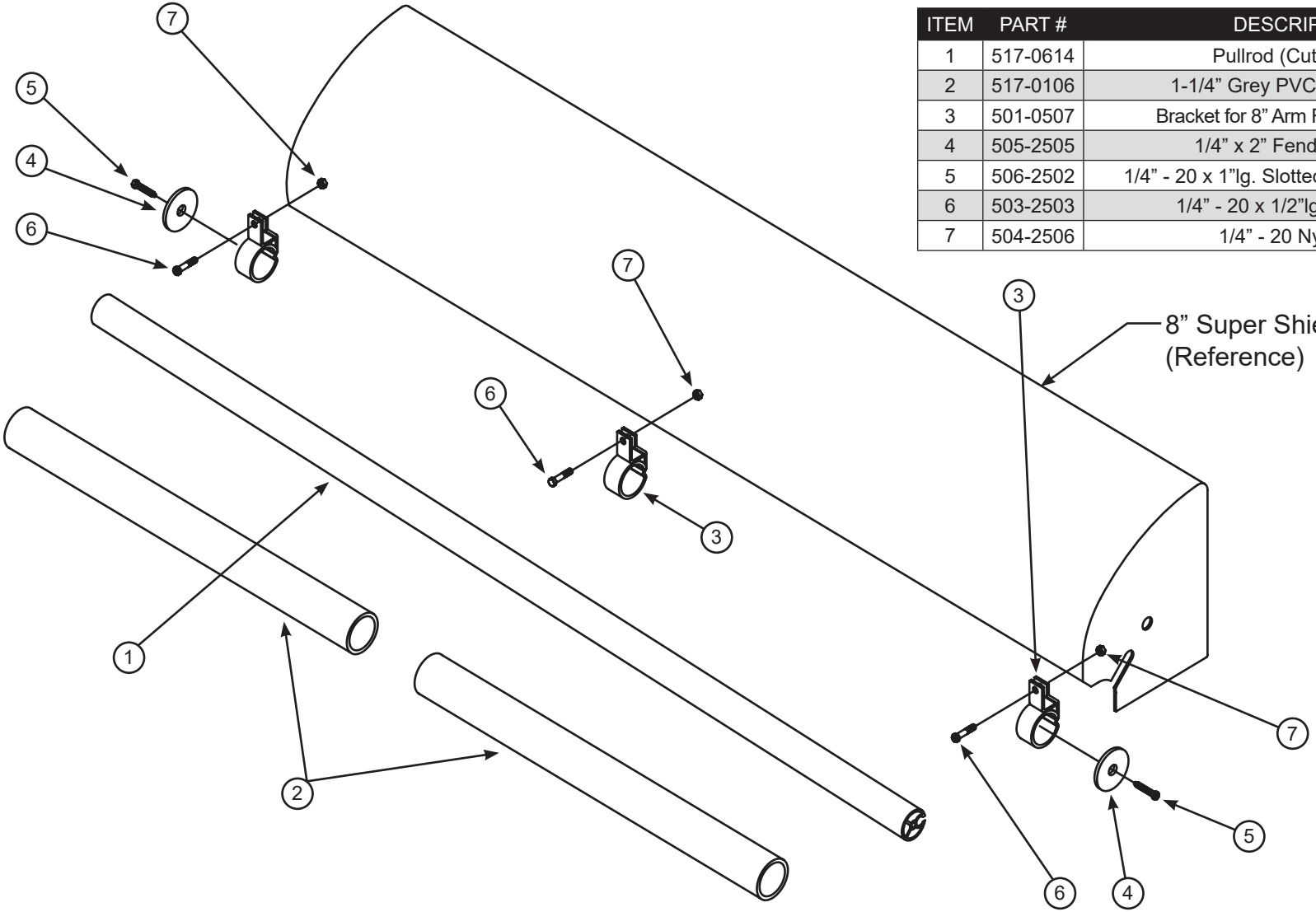

Tarp Tamer Bow to 21' Steel #501-1800 (Straight), #501-1801 (Bent)

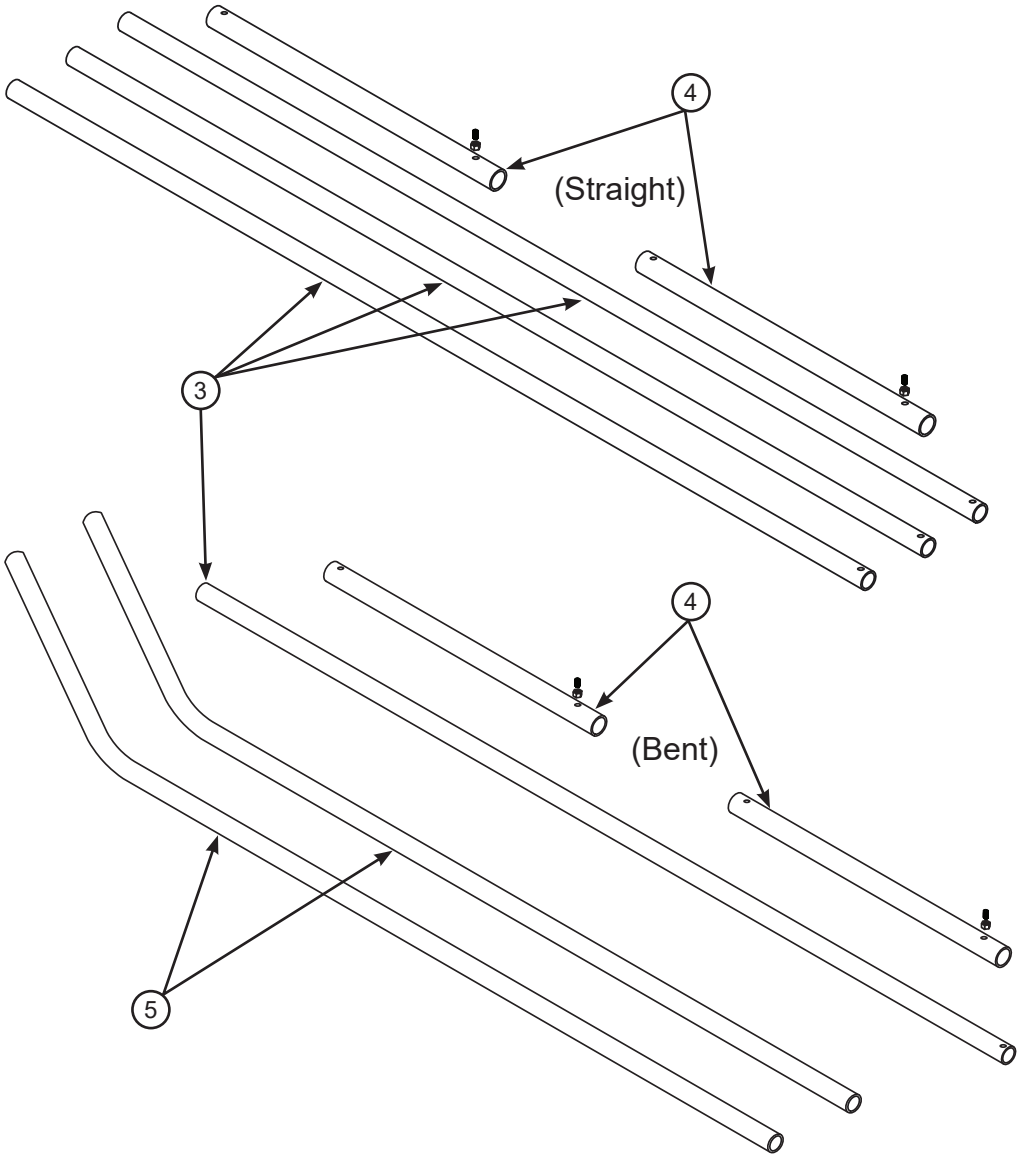

Straight & Bent

ITEM	PART #	DESCRIPTION	QTY
1	501-0796	Tarp Tamer Bow Hardware Kit (Straight)	1
--	--	Tarp Tamer Bow Hardware Kit (Bent)	1
2	501-1251	Elbow & Upper Conn. Hardware (Straight) - Steel	1
--	--	Elbow & Upper Conn. Hardware (Bent) - Steel	1
3	501-1202	Steel Upper Arm Tubing (Straight) - Drilled	3
--	--	Steel Upper Arm Tubing (Bent) - Drilled	1
4	501-1229	Lower Connection Arm Tube (Straight) - 34.25"	2
--	--	Lower Connection Arm Tube (Bent) - 34.25"	2
5	501-1205	Upper Arm Tubing (Bent) - Drilled	2

REV. 12/19/16 WLH

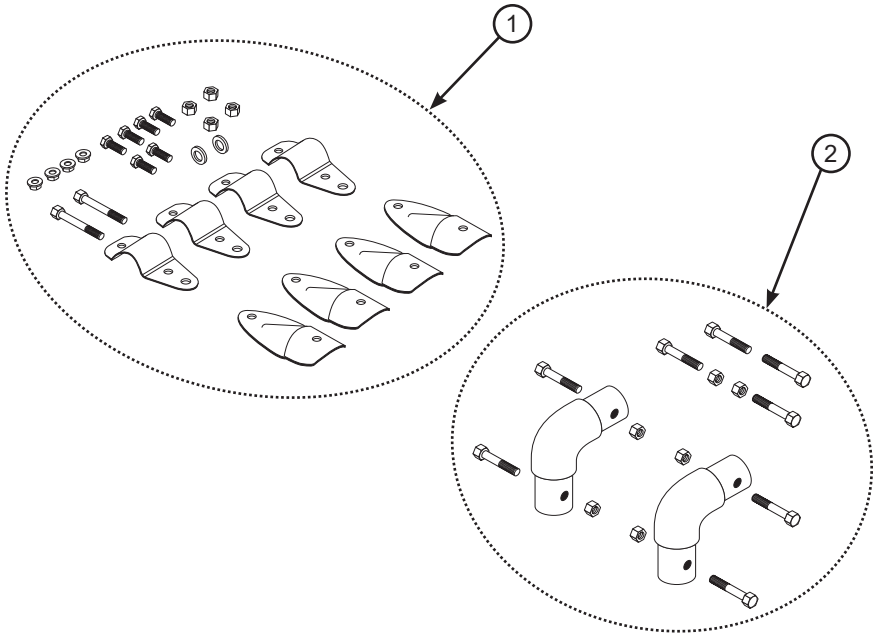

Tarp Tamer Bow to 21' Aluminum #501-1802 (Straight), #501-1803 (Bent)

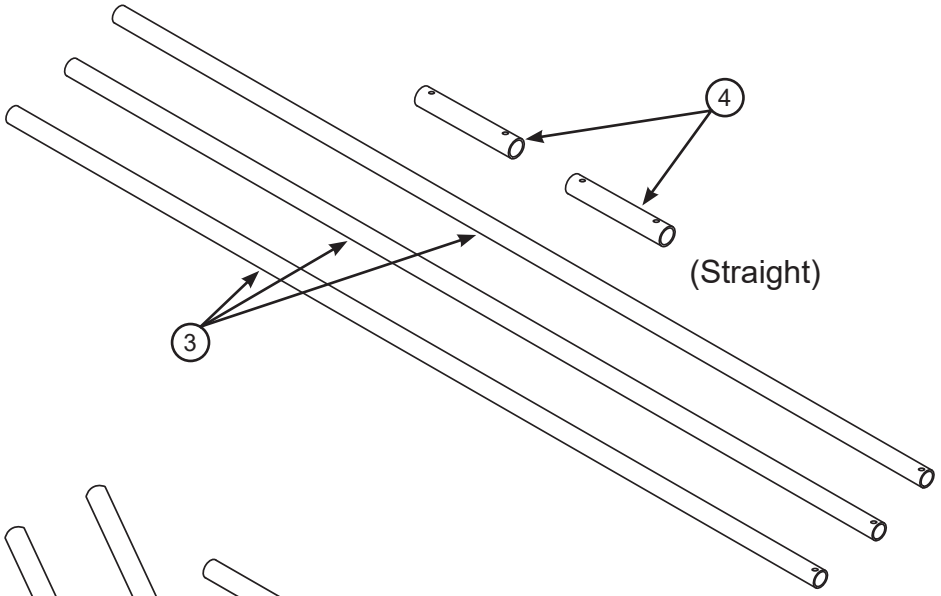

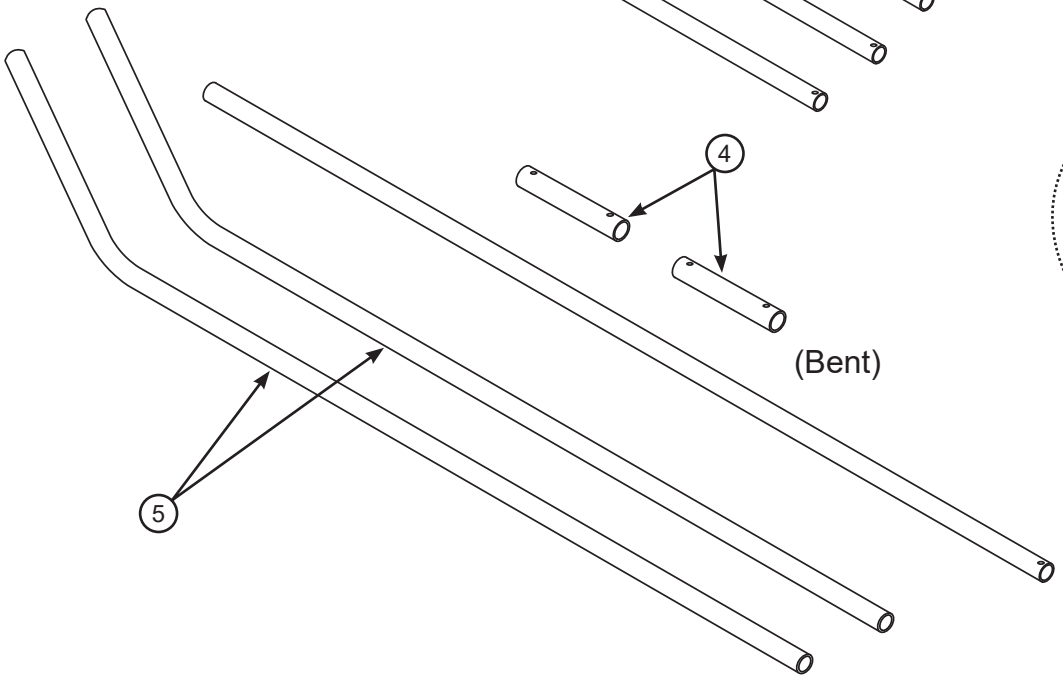

Straight & Bent

ITEM	PART #	DESCRIPTION	QTY
1	501-0796	Tarp Tamer Bow Hardware Kit (Straight)	1
--	--	Tarp Tamer Bow Hardware Kit (Bent)	1
2	501-1250	Elbow & Upper Conn. Hardware (Straight) - Alum	1
--	--	Elbow & Upper Conn. Hardware (Bent) - Alum	1
3	501-1211	Aluminum Upper Arm or Pullrod (Straight)	3
--	--	Aluminum Upper Arm or Pullrod (Bent)	1
4	501-1217	Aluminum 4 Spring Arm Tube 30" Long (Straight)	2
--	--	Aluminum 4 Spring Arm Tube 30" Long (Bent)	2
5	501-1214	Aluminum Upper Arm (Bent) - Up to 33'	2

REV. 12/19/16 WLH

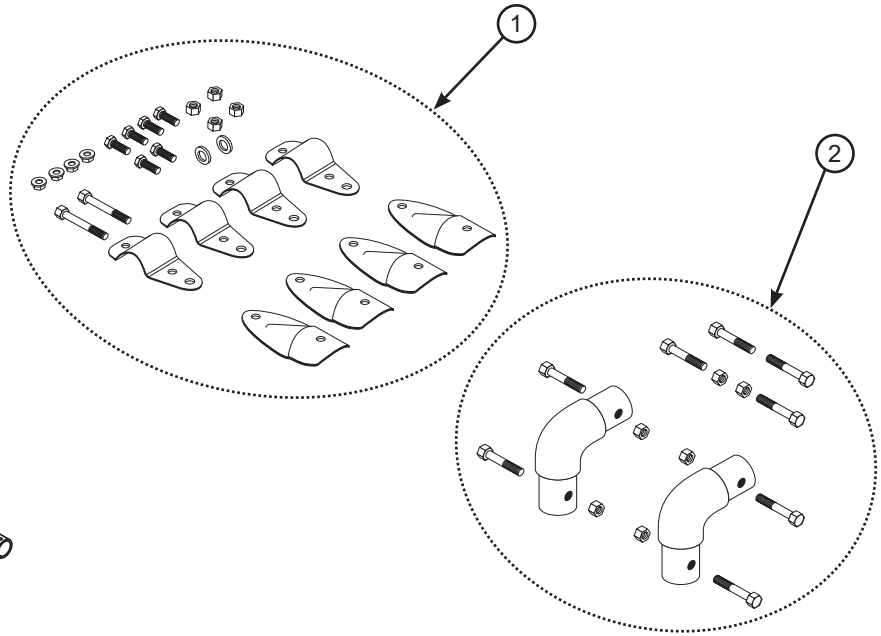

80” Wind Tray Kit / Aluminator 8500 Housing - #501-1030 (Shown)

Width Options: #501-1031 (84”), #501-1032 (87”), #501-1033 (89”), #501-1034 (93”), 501-1035 (96”) & 501-1036 (100”)

ITEM	PART #	DESCRIPTION	QTY
1	501-1037	8.5 Aluminum Tray 80”	1
2	501-1044	Left Aluminum Tray Support	1
3	501-1045	Right Aluminum Tray Support	1
4	503-3103	5/16”-18 x 3/4” HHCS Bolt	8
5	503-3105	5/16”-18 x 1” HHCS Bolt G2	4
6	504-3103	5/16”-18 Nylock Nut	12
7	505-3102	5/16” Lock Washer	12
8	506-3703	3/8” - 16 x 1-1/4” Full Thread Stud	4

REV. 05/07/19 WLH

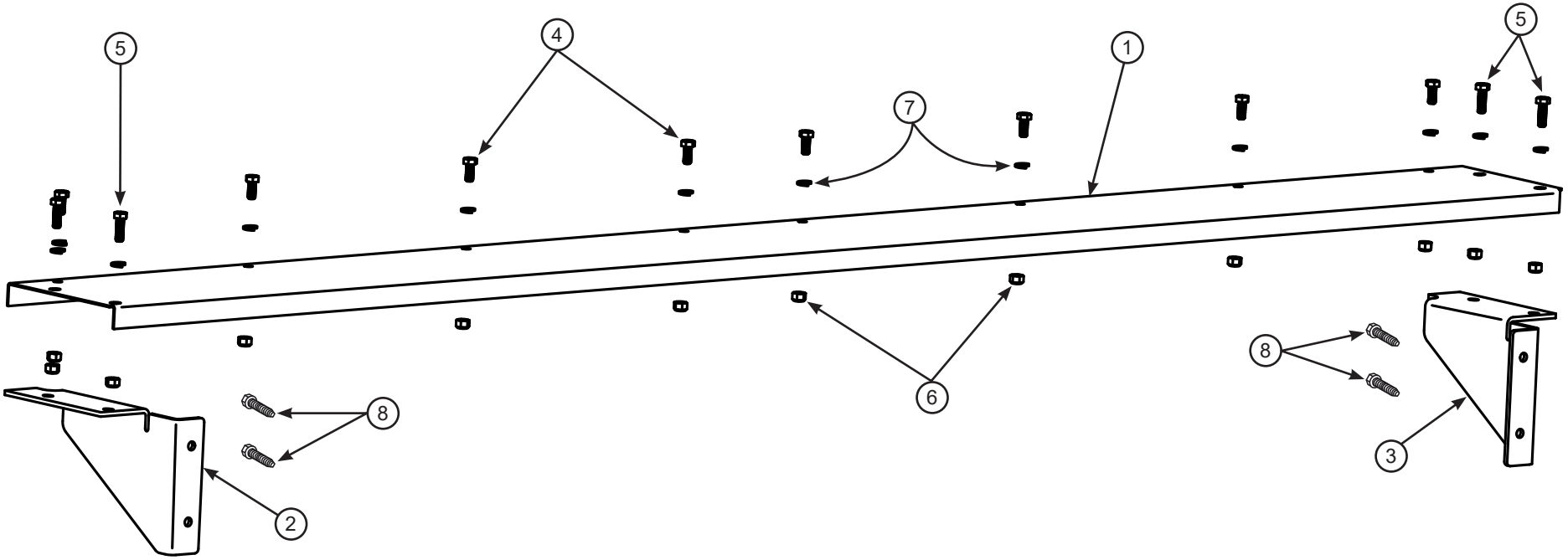

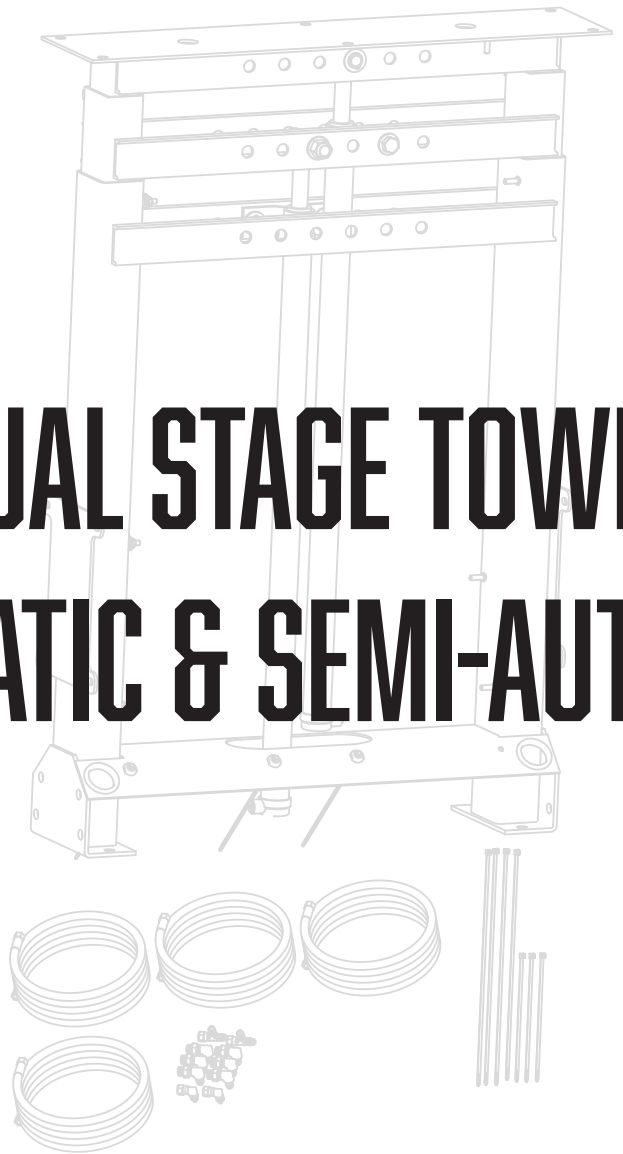

DUAL STAGE TOWER
AUTOMATIC & SEMI-AUTOMATIC

Dual Stage Electric Tower #513-0014

ITEM	PART #	DESCRIPTION	QTY
1	513-0080	Dual Stage Electric Tower	1
2	514-9986	10’ Pump Power Wire	1
3	514-9989	10’ Switch Power Wire	1
4	514-9987	18” Battery Wire	1
5	514-0432	50 Amp Type 1 Breaker	1
6	501-0687	Tower Tray Hardware Kit	1

REV. 08/31/18 WLH

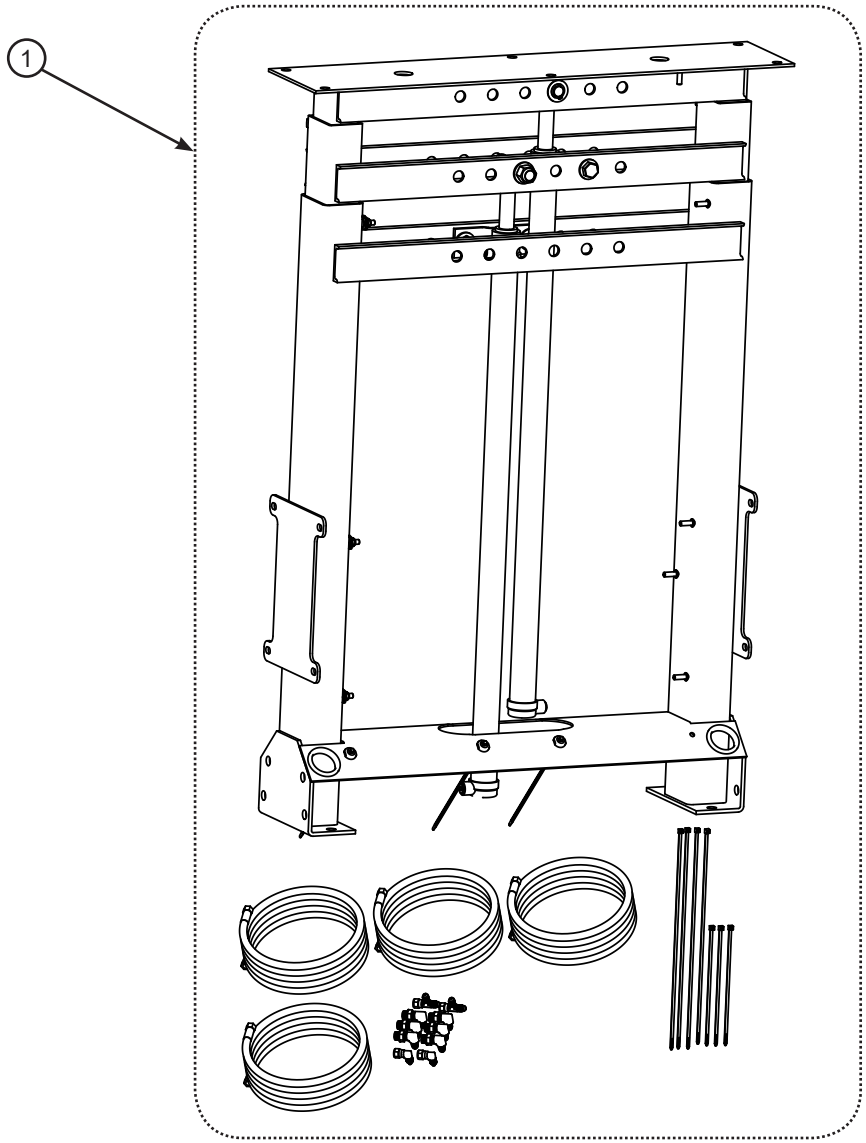

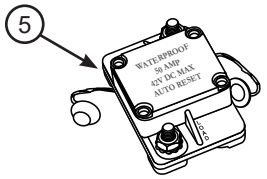

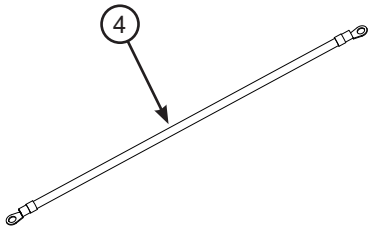

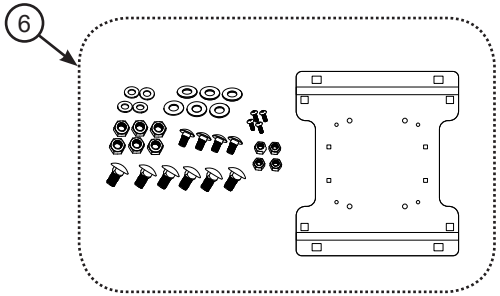

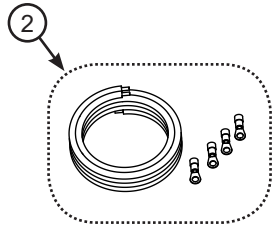

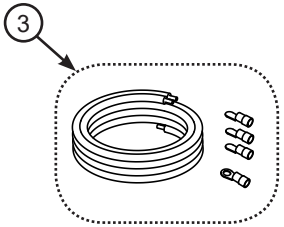

Dual Stage EDU Tower #513-0020

ITEM	PART #	DESCRIPTION	QTY
1	513-0080	Dual Stage Electric Tower	1
2	514-0432	50 Amp Type 1 Breaker	1
3	501-0687	Tower Tray Hardware Kit	1
4	514-9986	10’ Pump Power Wire	1
5	514-9989	10’ Switch Power Wire	1
6	514-9987	18” Battery Wire	1
7	501-0621	Steel Rope Hook Kit	1
8	517-1009	Pull rope 50’ with Bungee	1
9	501-0420	105” Pullrod with Hardware Bag	1

REV. 09/10/18 WLH

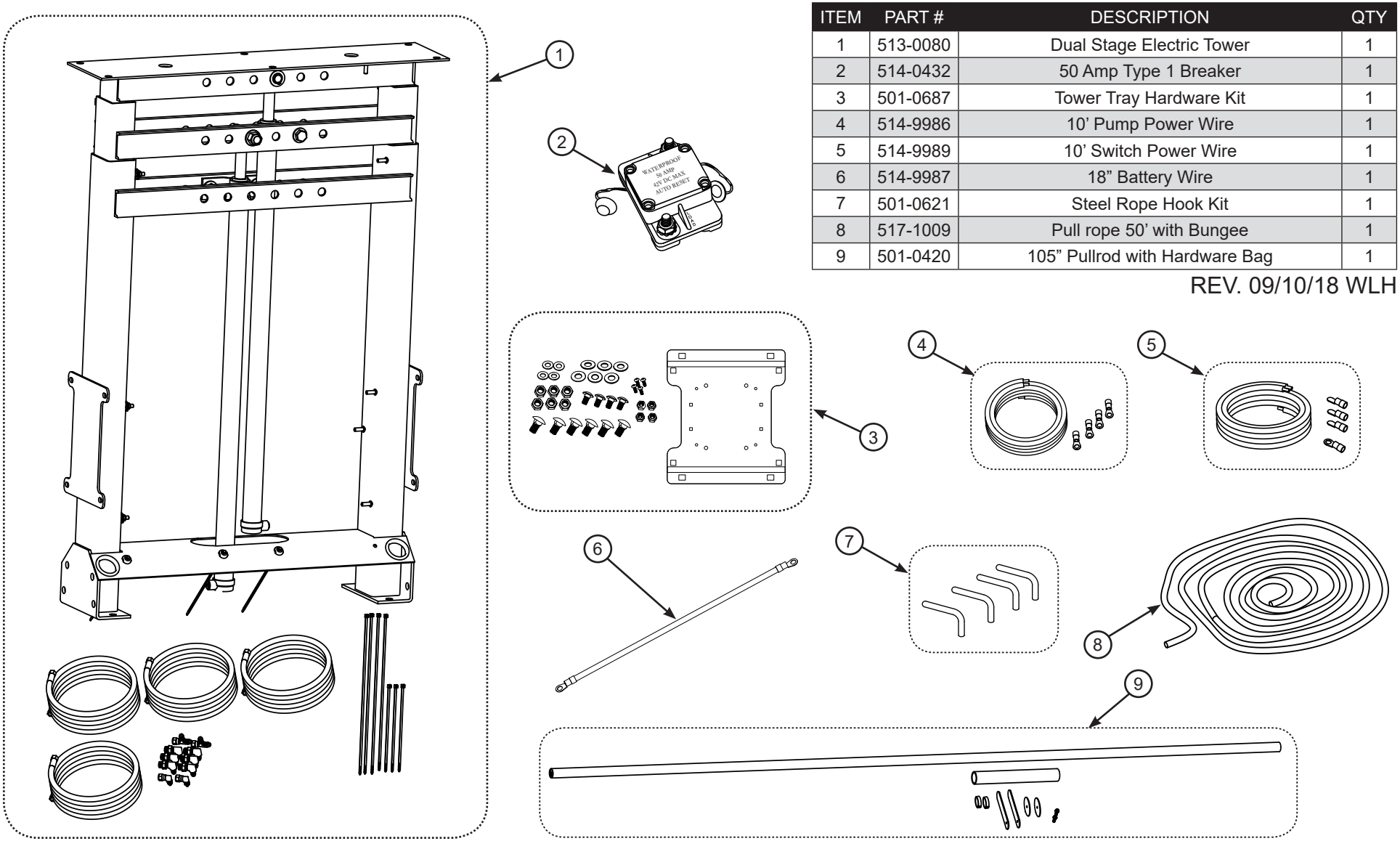

Dual Stage Pulltarp Tower #513-0019

ITEM	PART #	DESCRIPTION	QTY
1	513-0080	Dual Stage Electric Tower	1
2	501-0687	Tower Tray Hardware Kit	1
3	514-9986	10’ Pump Power Wire	1
4	501-0621	Steel Rope Hook Kit	1
5	517-1009	Pull rope 50’ with Bungee	1
6	501-0420	105” Pullrod with Hardware Bag	1

REV. 09/28/18 WLH

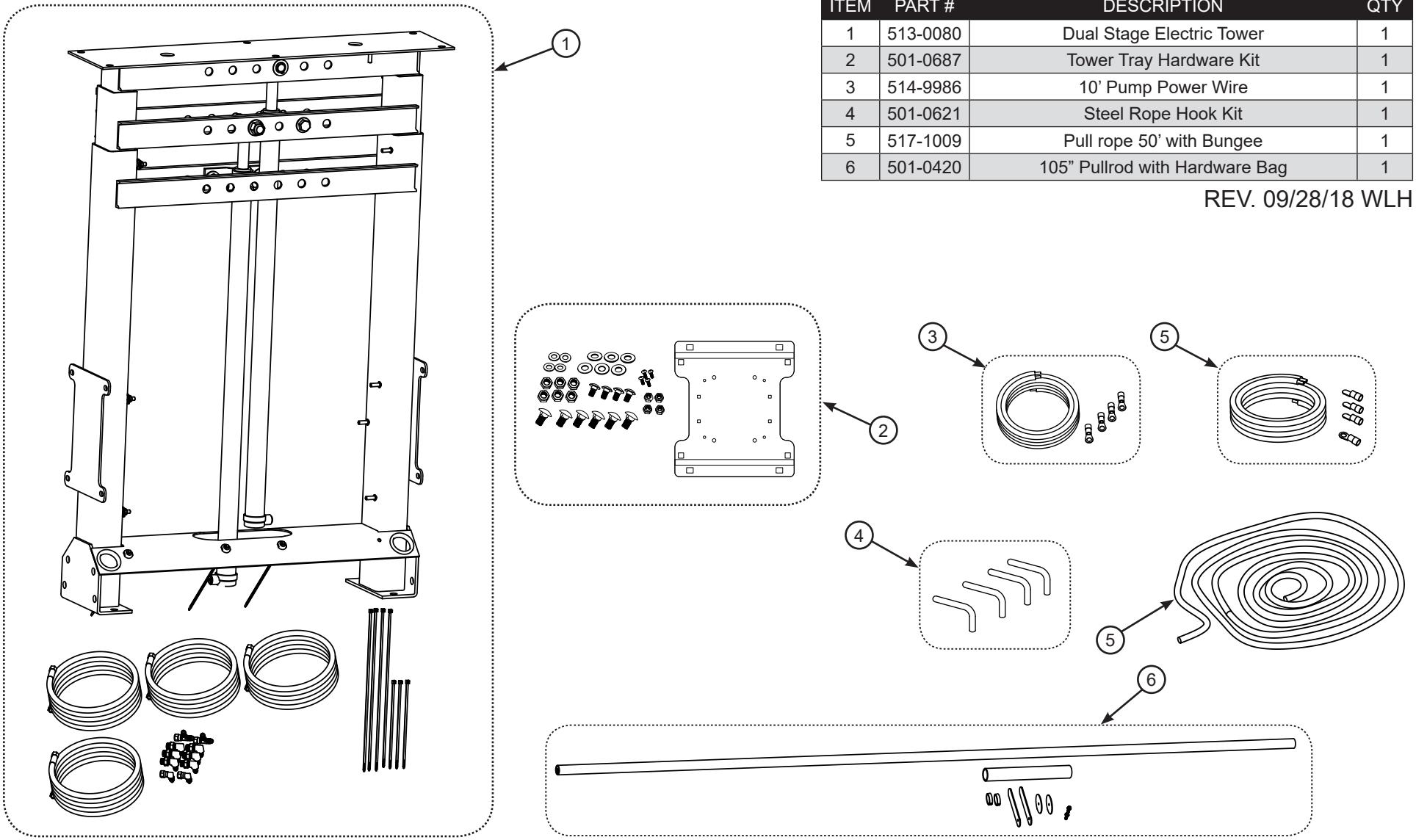

SuperShield™ 9500E 100” Tower Assembly with Tray #513-0081

ITEM	PART #	DESCRIPTION	QTY
1	501-0121	9.5” x 100” SuperShield™ Housing	1
2	501-0801	System End Plate Stud	1
3	501-1235	Aluminum Adapter Plate	1
4	501-9915	Roller Drive Aluminum End Cap 3”	1
5	503-3103	5/16” - 18 x 3/4” Hex Bolt	12
6	503-3104	5/16” - 18 x 3/4” Carriage Bolt	4
7	503-3105	5/16” - 18 x 1” HHCS Bolt G2	3
8	503-3108	5/16” - 18 1-3/4” HHCS Hex Bolt G2	1
9	504-3103	5/16” - 18 Nylock Nut Steel	17
10	504-5001	1/2” Crimp Nut	1
11	505-2502	1/4” USS Washer 5/16”	17
12	505-3102	5/16” Lock Washer	3

ITEM	PART #	DESCRIPTION (Continued)	QTY
13	505-5001	1/2” AN Washer 1/16” thick	1
14	506-9905	10 - 32 x 1/2” Philips Pan Head Screw	4
15	506-9916	Screw, #8 - 18 x 3/4” Self Drilling	1
16	513-0079	100” R/R Tower Tray	1
17	513-0090	Tower End Support Insert	2
18	514-0216	110” 2 Stage Tower Coil Wire	1
19	517-0102	Flanged End Cap	1
20	517-0511	SuperShield 9500 100” Electric Galv. Roller Tube	1
21	607-0061	Pulltarps Decal for System	1
22	517-0909	1.3HP 12V Motor & Gearbox (Optional)	1

REV. 09/13/18 WLH

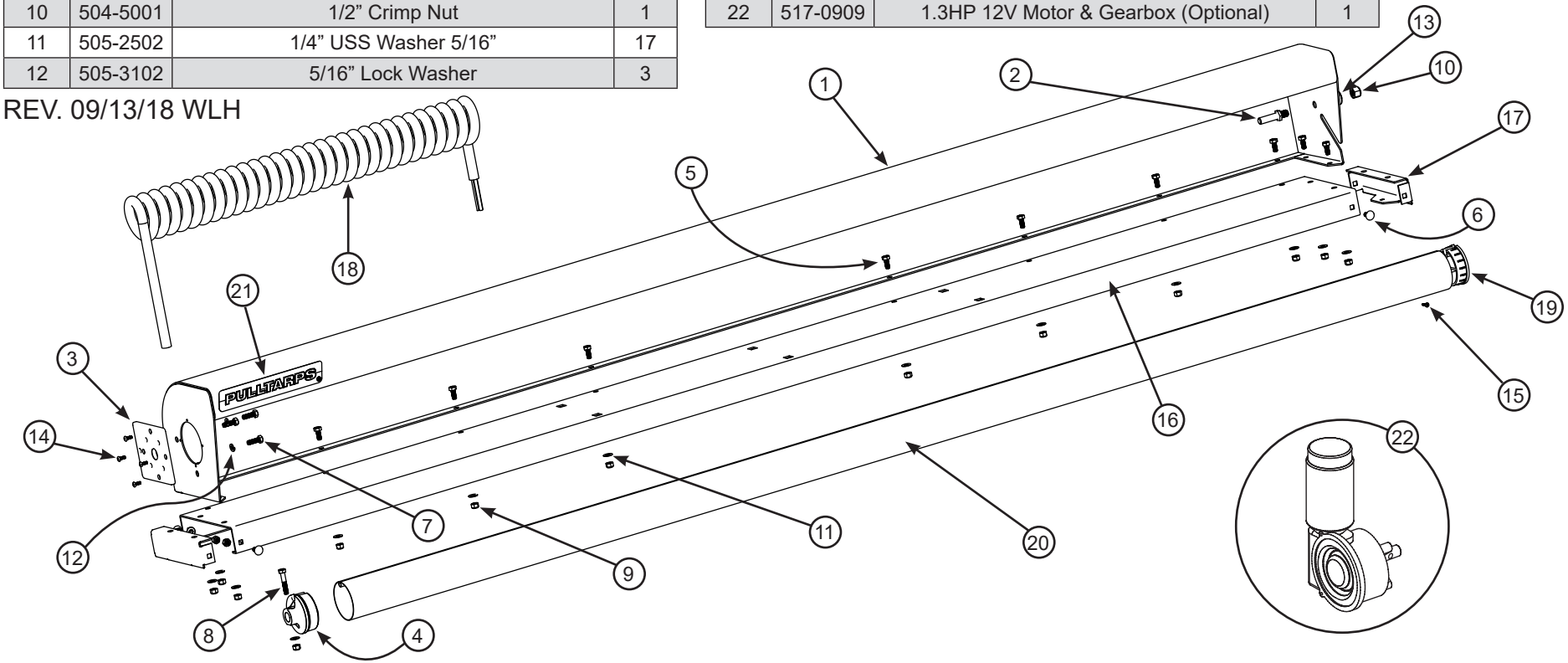

Open 9000E 102” Tower Assembly with Tray #513-0017

ITEM	PART #	DESCRIPTION	QTY
1	501-0801	System End Plate Stud	1
2	501-1368	102” Roller Assembly	1
3	503-3103	5/16” - 18 x 3/4” HHCS Bolt	3
4	503-3104	5/16” - 18 x 3/4” Carriage	1
5	503-3108	5/16” - 18 1-3/4” HHCS Hex	1
6	503-3118	5/16” - 18 x 5/8” Carriage	16
7	504-3102	5/16” - 18 Thin Nylock Nut	16
8	504-3103	5/16” - 18 Nylock Nut Steel	1
9	504-5001	1/2” Crimp Nut	1
10	505-2502	1/4” USS Washer 5/16”	17
11	505-3102	5/16” Lock Washer	3
12	505-5001	1/2” AN Washer 1/16”	1
13	513-0061	Tower Housing 102”	1
14	513-0062	Tower Housing End Plate	1
15	513-0063	Tower Electric End Plate	1
16	607-0061	Pulltarps Decal (Not Shown)	1
17	517-0909	1.3HP 12V Motor & Gearbox (Optional)	1

REV. 09/13/18 WLH

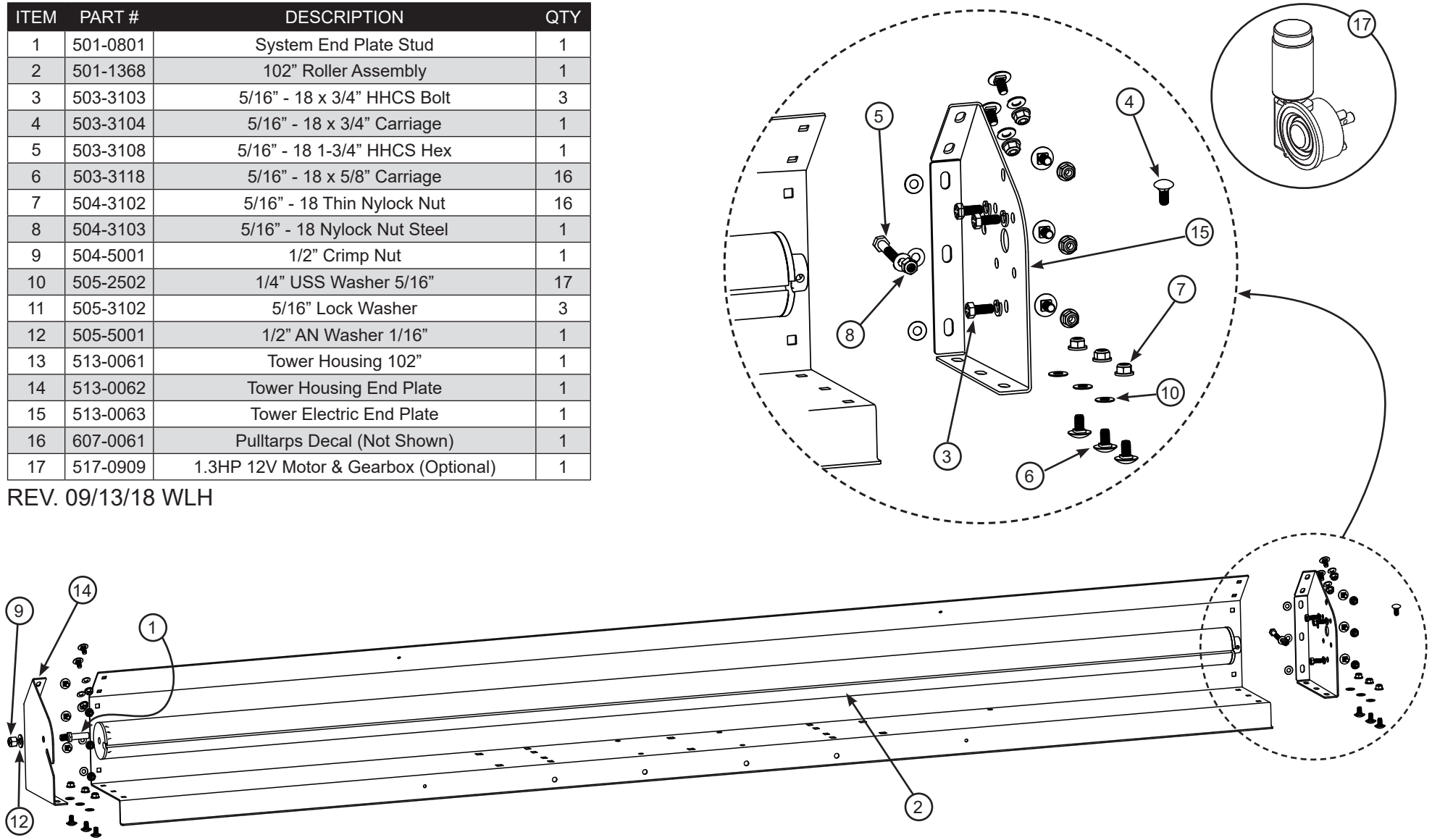

SuperShield™ 9500M 100” Tower Assembly with Tray #513-0082

ITEM	PART #	DESCRIPTION	QTY
1	501-0121	9.5” x 100” SuperShield™ Housing	1
2	501-0647	System End Plate Ratchet	1
3	501-0801	System End Plate Stud	1
4	501-1307	100” Spring Roller Tube	1
5	503-3101	5/16” - 18 x 1/2” Hex Bolt	12
6	503-3104	5/16” - 18 x 3/4” Carriage Bolt	4
7	504-3103	5/16” - 18 Nylock Nut Steel	16
8	504-5001	1/2” Crimp Nut	1
9	505-2502	1/4” USS Washer 5/16”	16
10	505-5001	1/2” AN Washer 1/16” Thick (Not Shown)	1
11	505-5002	Washer Nylon .51D x 1.25OD	2
12	506-9937	10-32 x 5/8” Philips Pan Head Screw	4

ITEM	PART #	DESCRIPTION (Continued)	QTY
13	513-0079	100” R/R Tower Tray	1
14	513-0090	Tower End Support Insert	2
15	607-0061	Pulltarps Decal for System	1

REV. 09/24/18 WLH

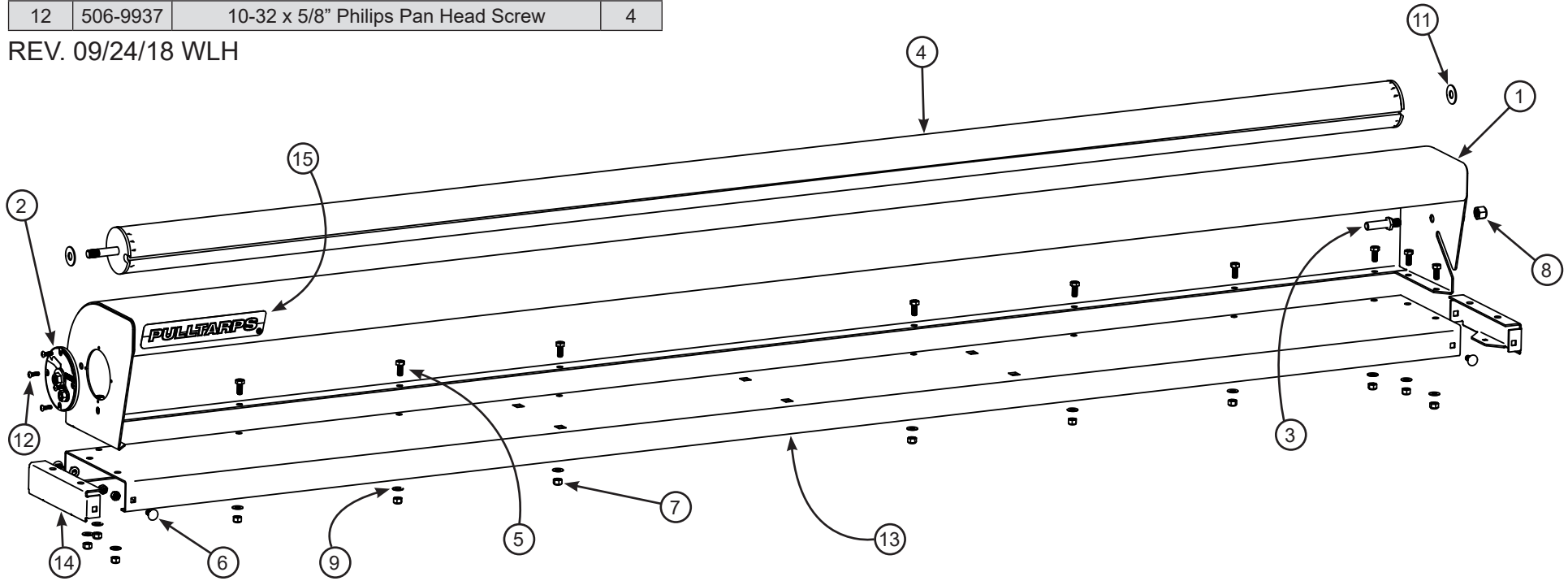

Open 9000M 102” Tower Assembly with Tray #513-0073

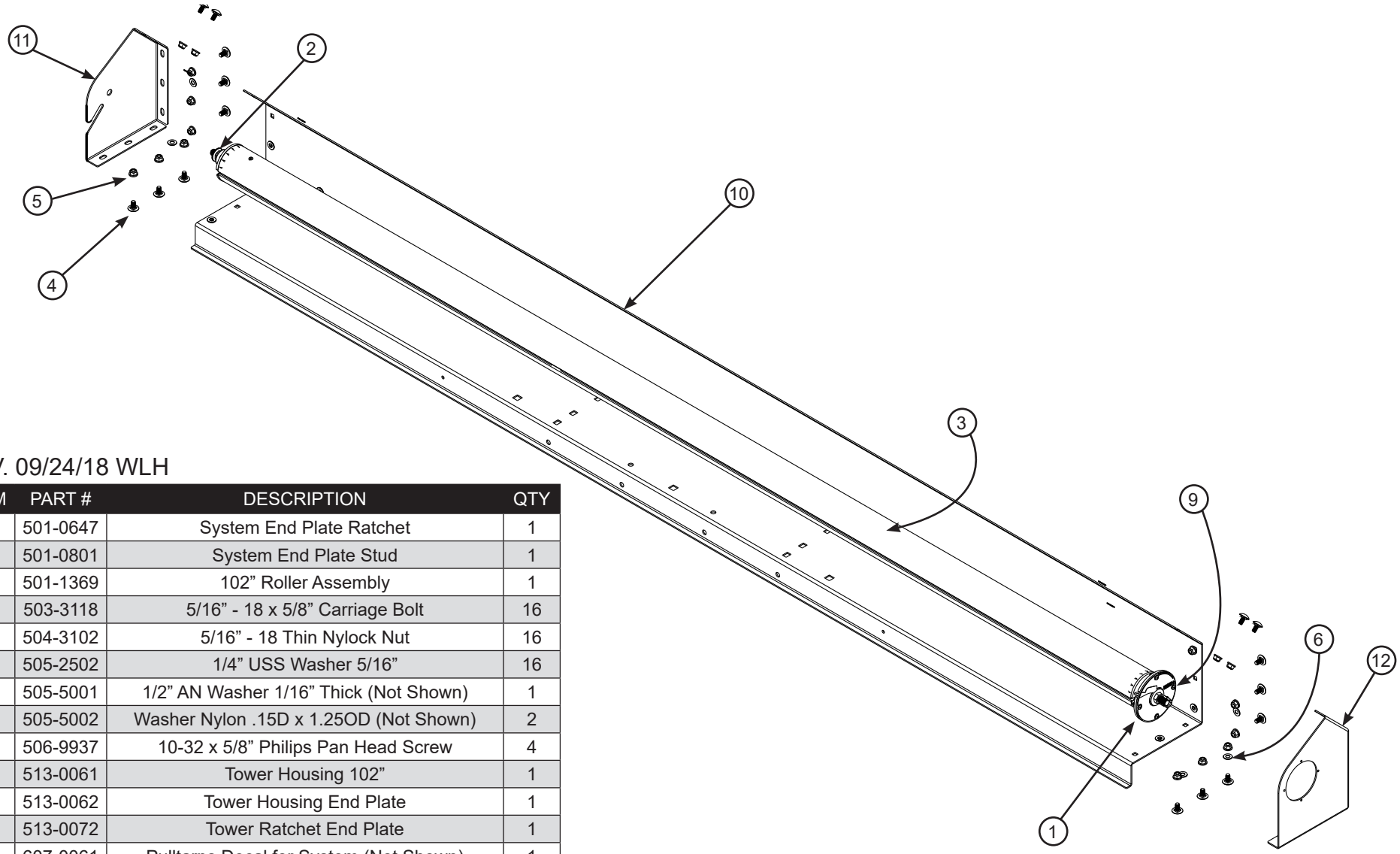

REV. 09/24/18 WLH

ITEM	PART #	DESCRIPTION	QTY
1	501-0647	System End Plate Ratchet	1
2	501-0801	System End Plate Stud	1
3	501-1369	102” Roller Assembly	1
4	503-3118	5/16” - 18 x 5/8” Carriage Bolt	16
5	504-3102	5/16” - 18 Thin Nylock Nut	16
6	505-2502	1/4” USS Washer 5/16”	16
7	505-5001	1/2” AN Washer 1/16” Thick (Not Shown)	1
8	505-5002	Washer Nylon .15D x 1.25OD (Not Shown)	2
9	506-9937	10-32 x 5/8” Philips Pan Head Screw	4
10	513-0061	Tower Housing 102”	1
11	513-0062	Tower Housing End Plate	1
12	513-0072	Tower Ratchet End Plate	1
13	607-0061	Pulltarps Decal for System (Not Shown)	1

Tower Tray Hardware Kit #501-0687 (Illustrations not to scale)

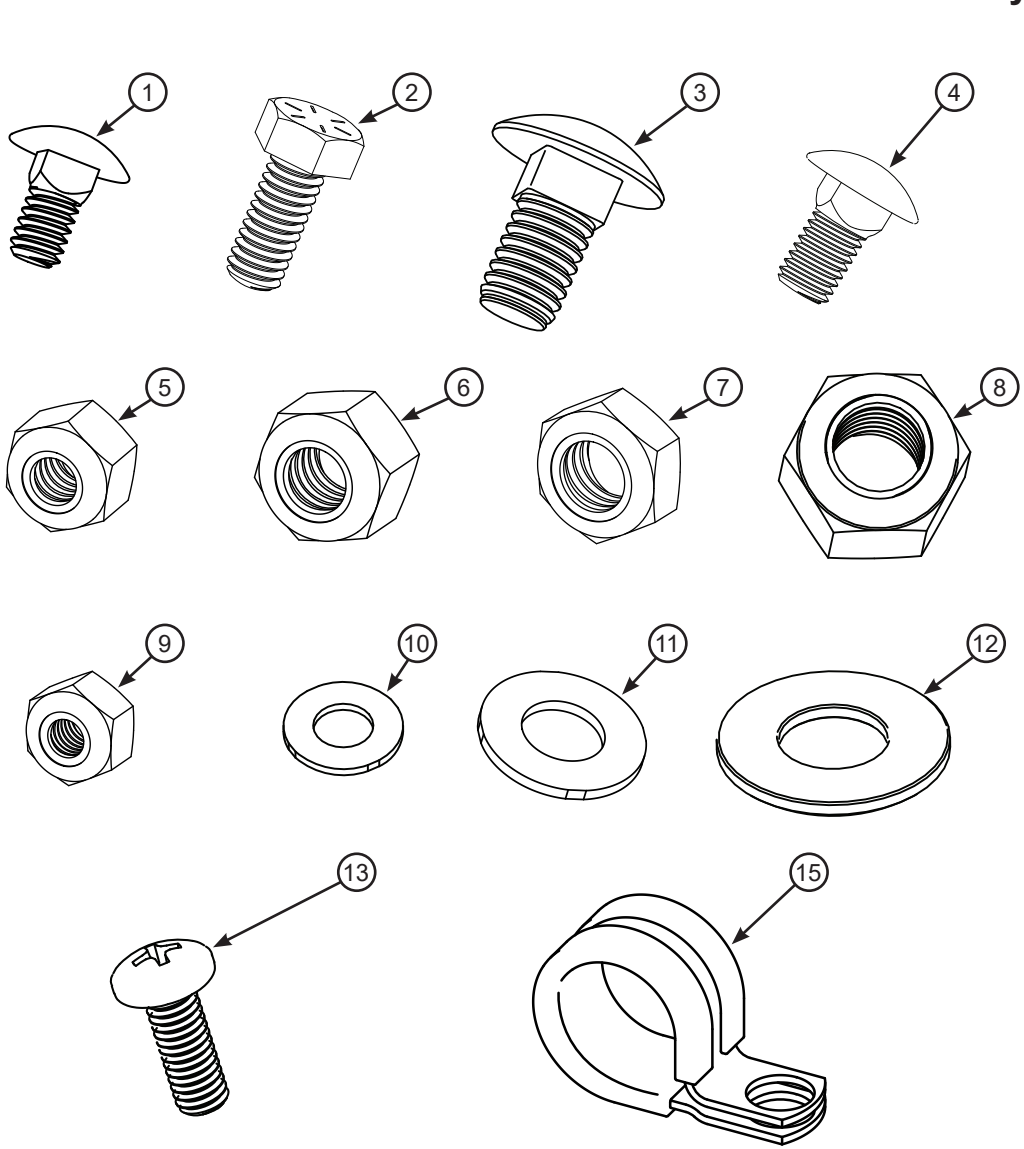

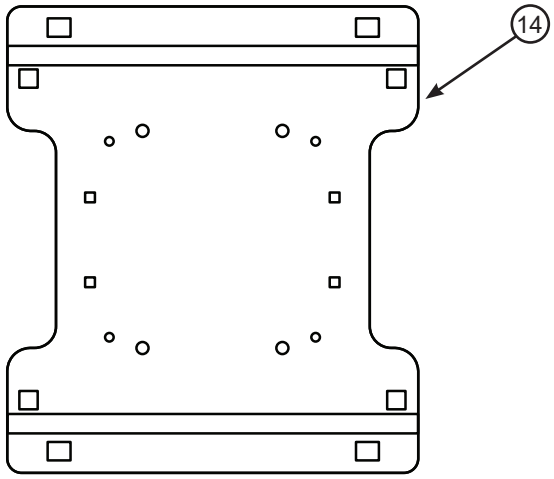

ITEM	PART #	DESCRIPTION	QTY
1	503-2501	1/4” - 20 x 1/2” USS Carriage Bolt	2
2	503-3103	5/16” - 18 x 3/4” HHCS Bolt	2
3	503-3717	3/8” - 16 x 3/4” Carriage Bolt	8
4	503-5020	1/2” - 13 x 1” Carriage Bolt	6
5	504-2503	1/4” - 20 USS Nylock Nut	2
6	504-3103	5/16” - 18 Nylock Nut Steel Zinc	2
7	504-3705	3/8” - 16 Nylock Nut “Thin”	8
8	504-5004	1/2” - 13 Nylock Nut	6
9	504-9903	10 - 32 Nylock Nut	4
10	505-2502	1/4” USS Washer 5/16” Hole	4
11	505-3702	Washer 3/8” SAE Flat Zinc	8
12	505-5004	1/2” USS Flat Washer	6
13	506-9905	10 - 32 x 1/2” Philips Pan Head Screw	4
14	513-0093	Universal Tower Switch Plate	1
15	514-9977	Wire Clamps 3/4” ID	2

REV. 09/13/18 WLH

105” Pullrod with Hardware #501-0420 (Illustrations not to scale)

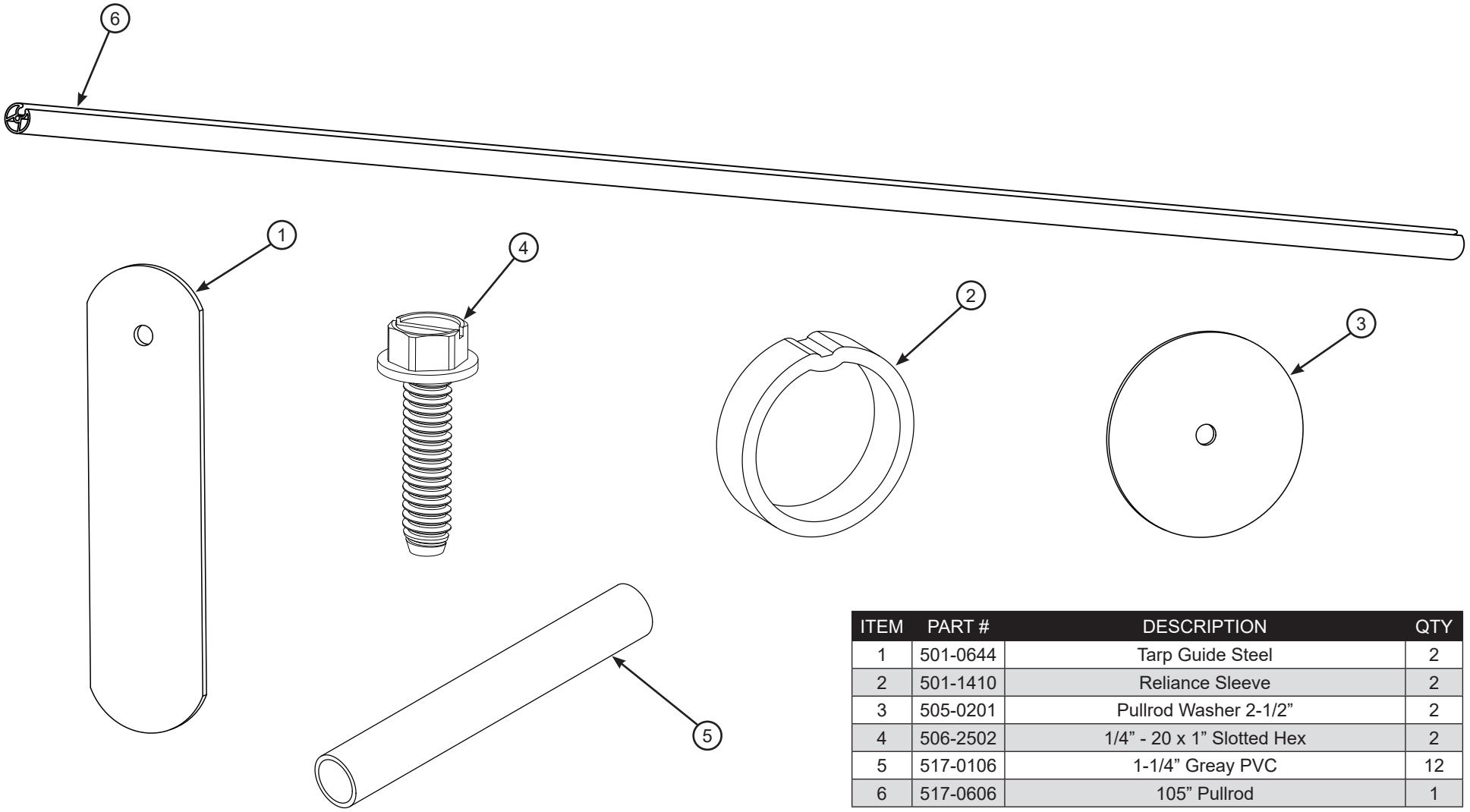

ITEM	PART #	DESCRIPTION	QTY
1	501-0644	Tarp Guide Steel	2
2	501-1410	Reliance Sleeve	2
3	505-0201	Pullrod Washer 2-1/2”	2
4	506-2502	1/4” - 20 x 1” Slotted Hex	2
5	517-0106	1-1/4” Greay PVC	12
6	517-0606	105” Pullrod	1

REV. 10/08/18 WLH

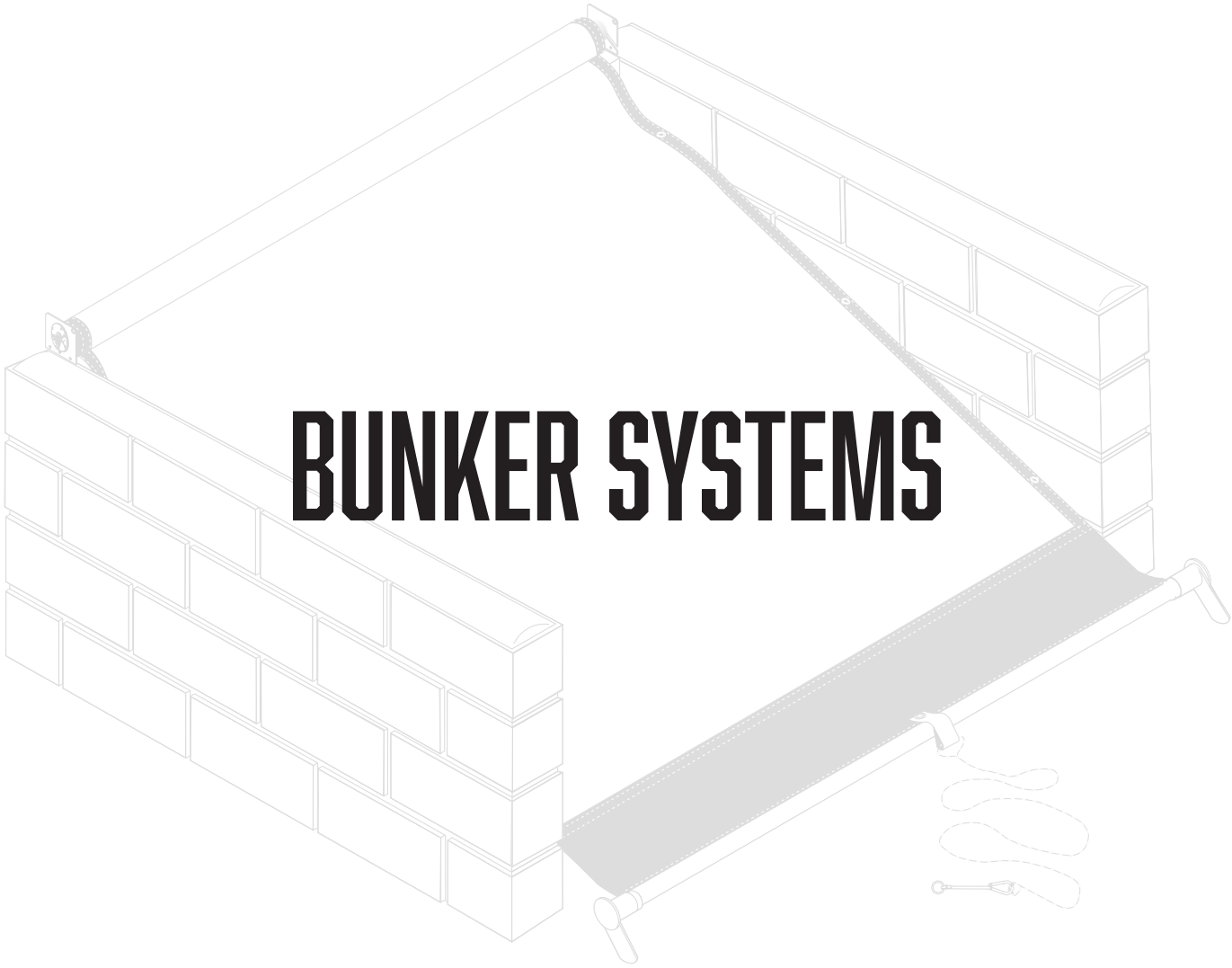

BUNKER SYSTEMS

Bunker Open 9000M #105-1830
(Width of 183")

ITEM	PART #	DESCRIPTION	QTY
1	501-0220	9" End Plate without Stud	1
2	501-0289	9" Bunker End Plate	1
3	501-0647	System End Plate Ratchet Assembly	1
4	501-0801	System End Plate Stud	1
5	501-1371	183" Bunker Roller Tube	1
6	501-1555	Bunker System Mounting Bracket	2
7	503-3104	5/16" - 18 x 3/4" Carriage Bolts	6
8	504-3102	5/16" - 18 Jam Nyloc Nut	6
9	504-5001	1/2" Crimp Nut	1
10	505-5001	1/2" AN Washer 1/16" TK	1
11	505-5002	Washer Nylon 0.5 ID x 1.25 OD x 0.63 TK	2
12	506-9937	10-32 x 5/8" Phillips Pan Head Screw	4
13	505-2502	1/4" USS Washer 5/16" ID	6

REV. 12/05/16 WLH

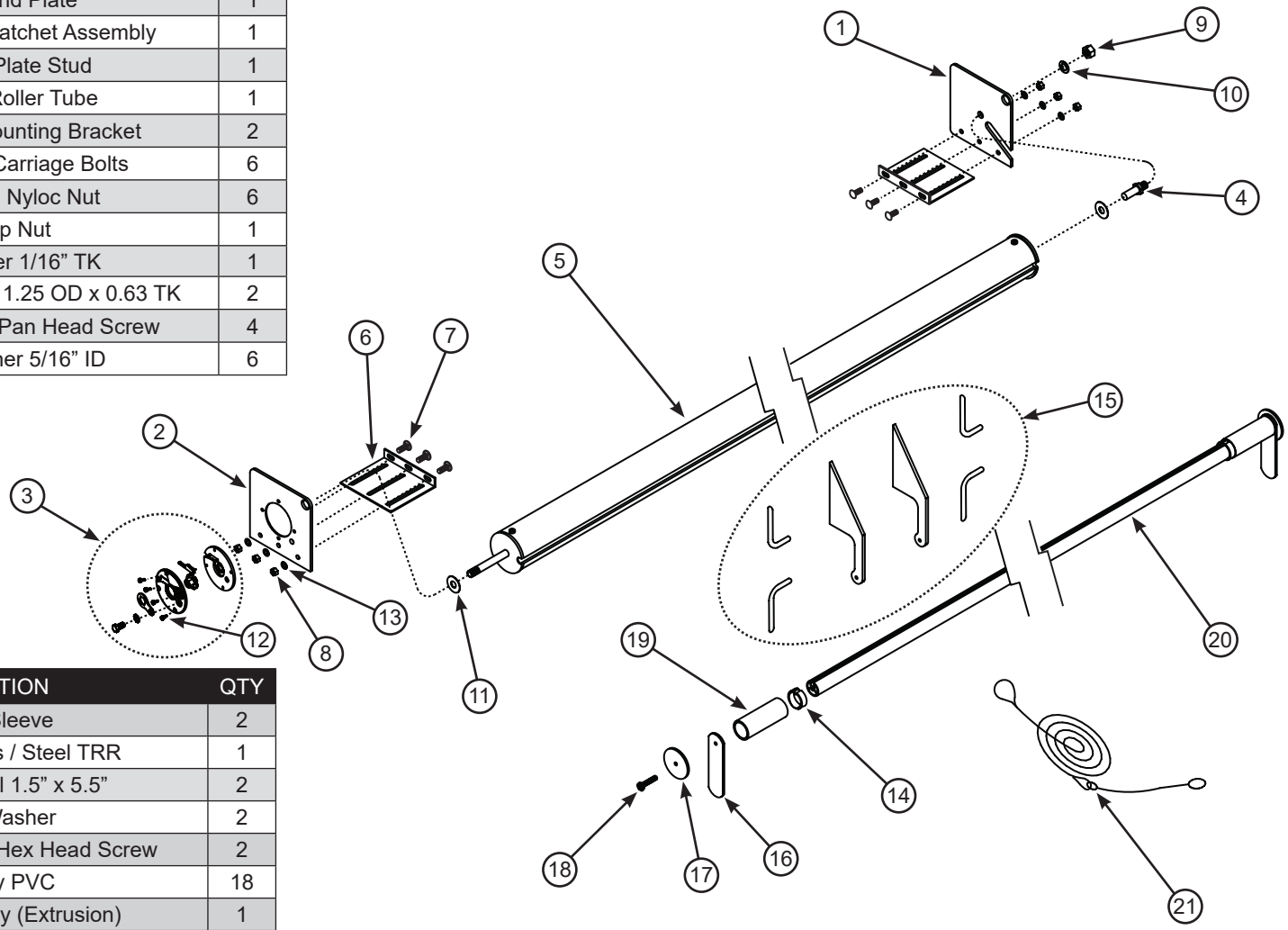

Pullrod Hardware

ITEM	PART #	DESCRIPTION	QTY
14	501-1410	Reliance Sleeve	2
15	501-0623	Steel Rope Hooks / Steel TRR	1
16	501-0644	Tarp Guide Steel 1.5" x 5.5"	2
17	505-0201	Pull Rod Washer	2
18	506-2502	1/4" - 20 x 1" Slotted Hex Head Screw	2
19	517-0106	1-1/4" Grey PVC	18
20	517-0610	Pull Rod 204" Only (Extrusion)	1
21	517-1006	35' Pull Rope with Bungee	1

Bunker Open 9000M #105-2880

(Width of 288”)

ITEM	PART #	DESCRIPTION	QTY
1	501-0220	9” End Plate without Stud	1
2	501-0289	9” Bunker End Plate	1
3	501-0647	System End Plate Ratchet Assembly	1
4	501-0801	System End Plate Stud	1
5	501-1370	288” Bunker Roller Tube	1
6	501-1555	Bunker System Mounting Bracket	2
7	503-3104	5/16” - 18 x 3/4” Carriage Bolts	6
8	504-3102	5/16” - 18 Jam Nyloc Nut	6
9	504-5001	1/2” Crimp Nut	1
10	505-2502	1/4” USS Washer 5/16” ID	6
11	505-5001	1/2” AN Washer 1/16” TK	1
12	505-5002	Washer Nylon 0.5 ID x 1.25 OD x 0.63 TK	4
13	506-9937	10-32 x 5/8” Phillips Pan Head Screw	4
14	501-1420	1/2” x 66” Spring Shaft with CAD	1
15	501-1403	1/2” x 66” Spring Shaft with CAD	1
16	501-1411	1/2” x 59.5” PVC SCH 40 Spacer	2
17	517-9916	Main Spring	2
18	517-0104	Torque Block	2
19	506-1201	1/8” x 1” Cotter Pin	2
20	505-5001	1/2” AN Washer 1/16” TK	2
21	504-5007	1/2” - 13 x 1-3/4” Coupling Nut	1

REV. 04/18/19 WLH

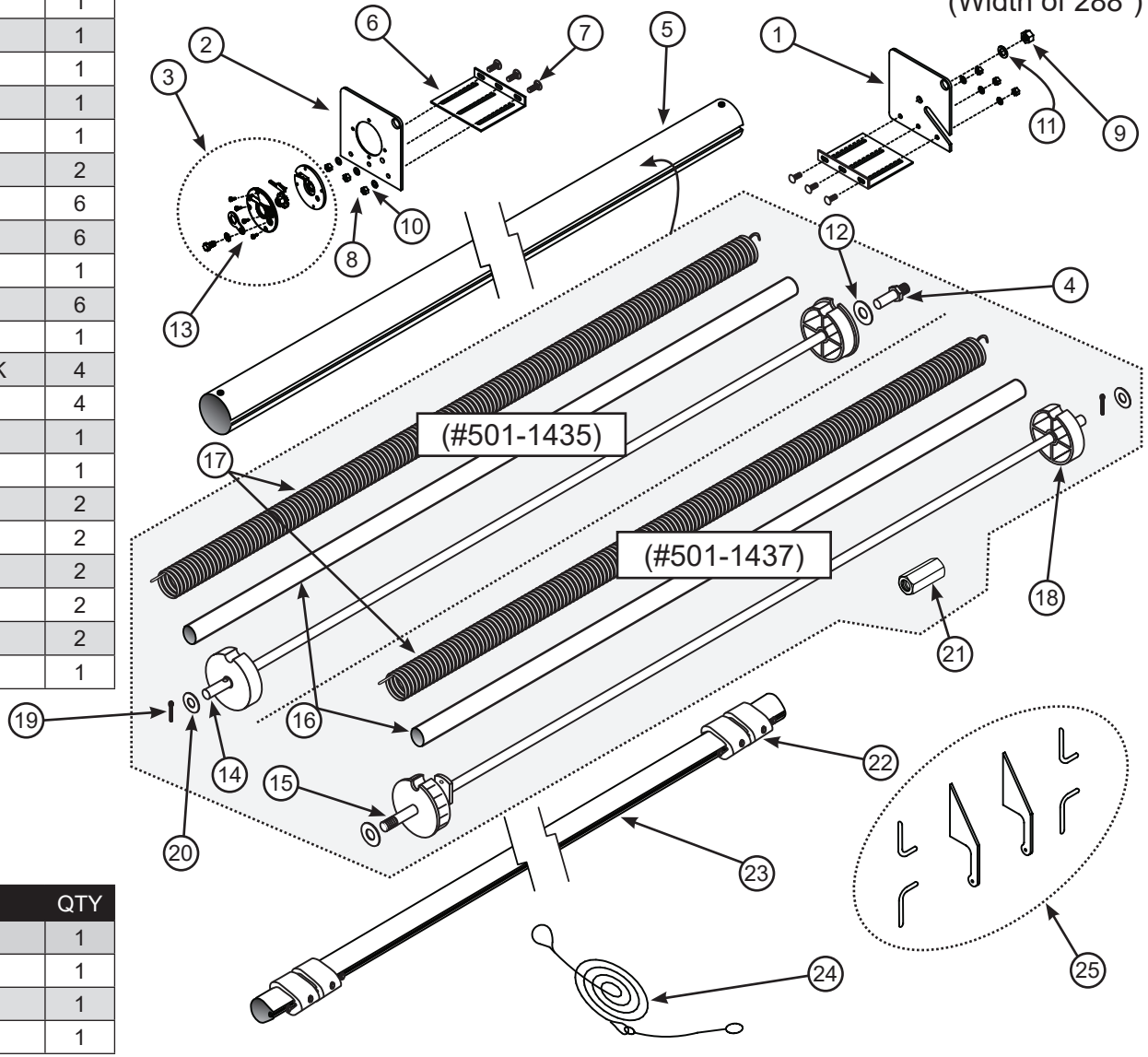

Universal Teardrop Pullrod Hardware

ITEM	PART #	DESCRIPTION	QTY
22	501-1293	Teardrop Bumper Kit	1
23	517-0636	288” Teardrop Pull Bar	1
24	517-1009	50’ Pull Rod with Bungee	1
25	501-0623	Steel Rop Hooks / Steel TRR	1

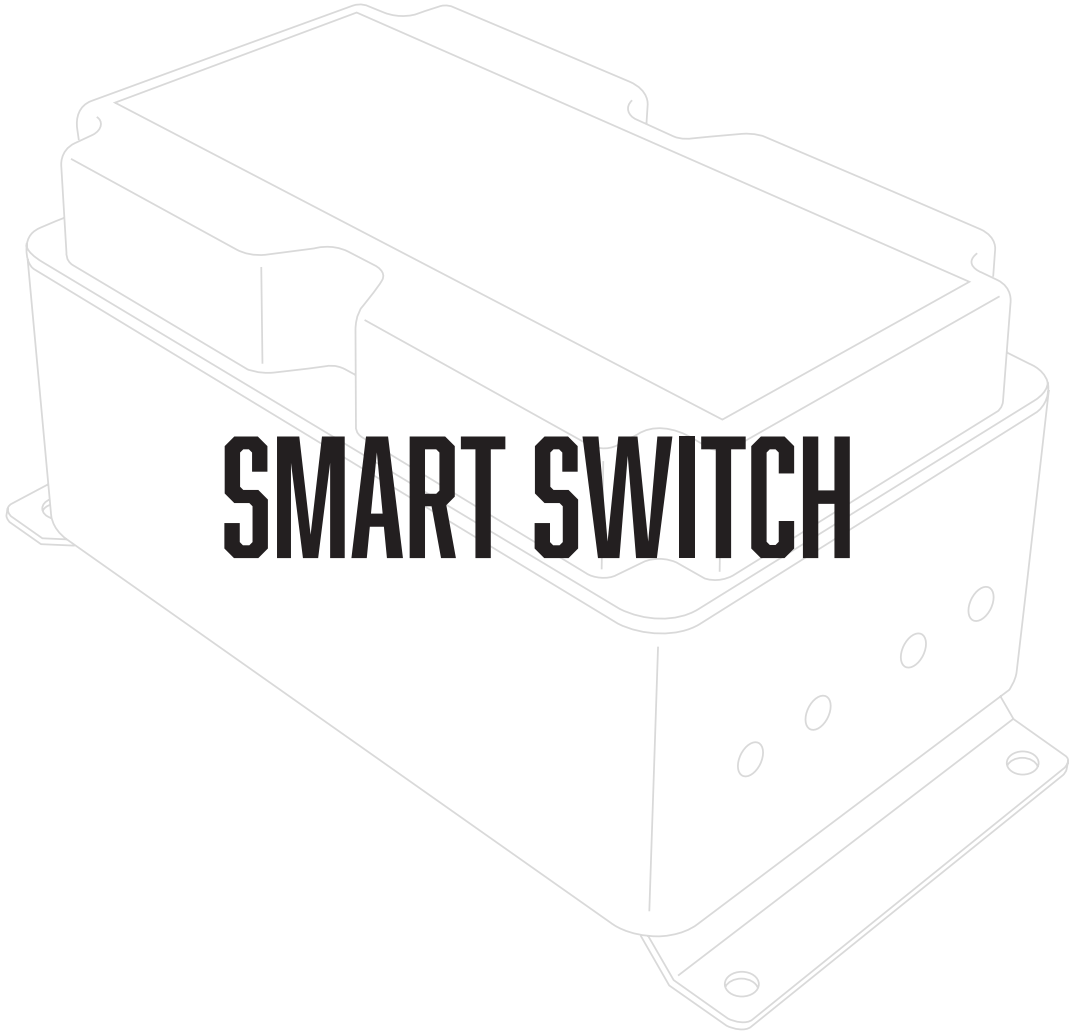

SMART SWITCH

Smart Switch with Cab / External Switch - 24 Volt #501-9933

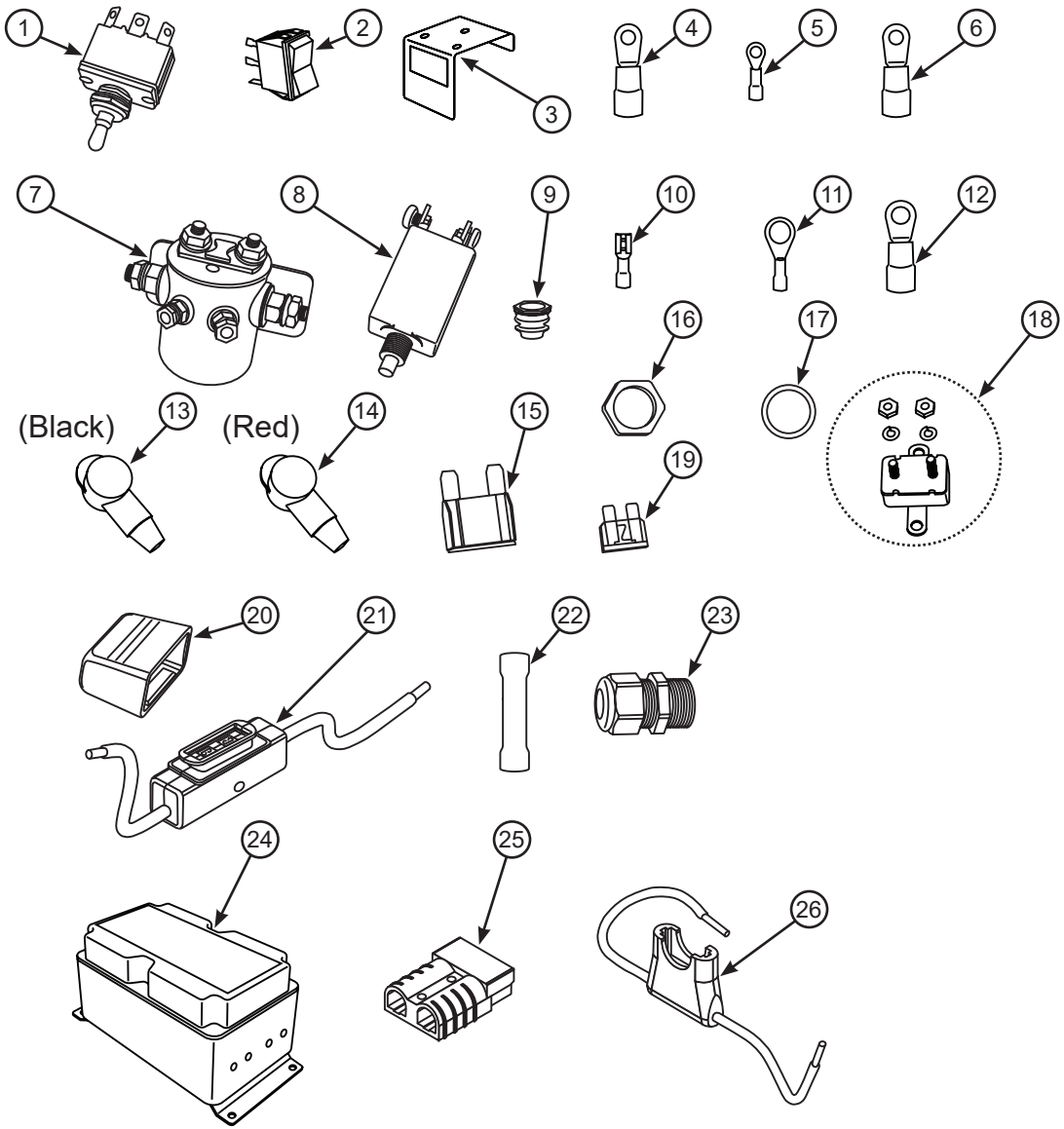

ITEM	PART #	DESCRIPTION	QTY
1	514-0130	Sealed Toggle Switch	1
2	514-0117	Rocker Switch 3 Position Momentary	1
3	514-9954	Rocker Switch Bracket	1
4	514-0307	Connector 6 Ga. #10 Stud	2
5	514-0303	Connector 14 Ga. #10 Terminal	4
6	514-0308	Connector 6 Ga. Lug with 1/4” Eyelet	6
7	514-9916	Solenoid 24 Volt	2
8	514-0407	50 Amp Circuit Breaker	1
9	514-0419	Boot for 50 Amp Circuit Breaker	1
10	514-0321	16 Ga. Push on Female Terminal	3
11	514-0315	Connector 14Ga. 5/16” Eyelet	2
12	514-0309	Connector 6 Ga. Lug with 3/8” Eyelet	2
13	514-0317	Black Terminal Boot	2
14	514-0319	Red Terminal Boot	2
15	514-0417	80 Amp Blade Fuse	1
16	514-0325	Strain Relief Seal	1
17	514-0324	Strain Relief Lock Washer	1
18	514-0413	24V 40 Amp Type III Breaker	--
19	514-0415	15 Amp 32V DC Blade Fuse	1
20	514-0431	Line Fuse Holder 80 Amp Cover	1
21	514-0418	Line Fuse Holder 80 Amp	1
22	514-0318	Butt Connector 6 Ga.	1
23	514-0323	Strain Relief 1/2” NPT	1
24	517-9923	Plastic Flanged Solenoid Box	1
25	514-0505	Quick Disconnect Term 50 Amp Gray	1
26	514-0416	In Line Fuse Holder for 15 Amp	1
--	514-0127	24V Retro Fit Kit (Not shown)	1
--	514-0211	#16 - 3 Wire PVC 27# Copper	25’

REV. 12/19/17 WLH

Smart Switch with External Switch - 24 Volt #501-9949

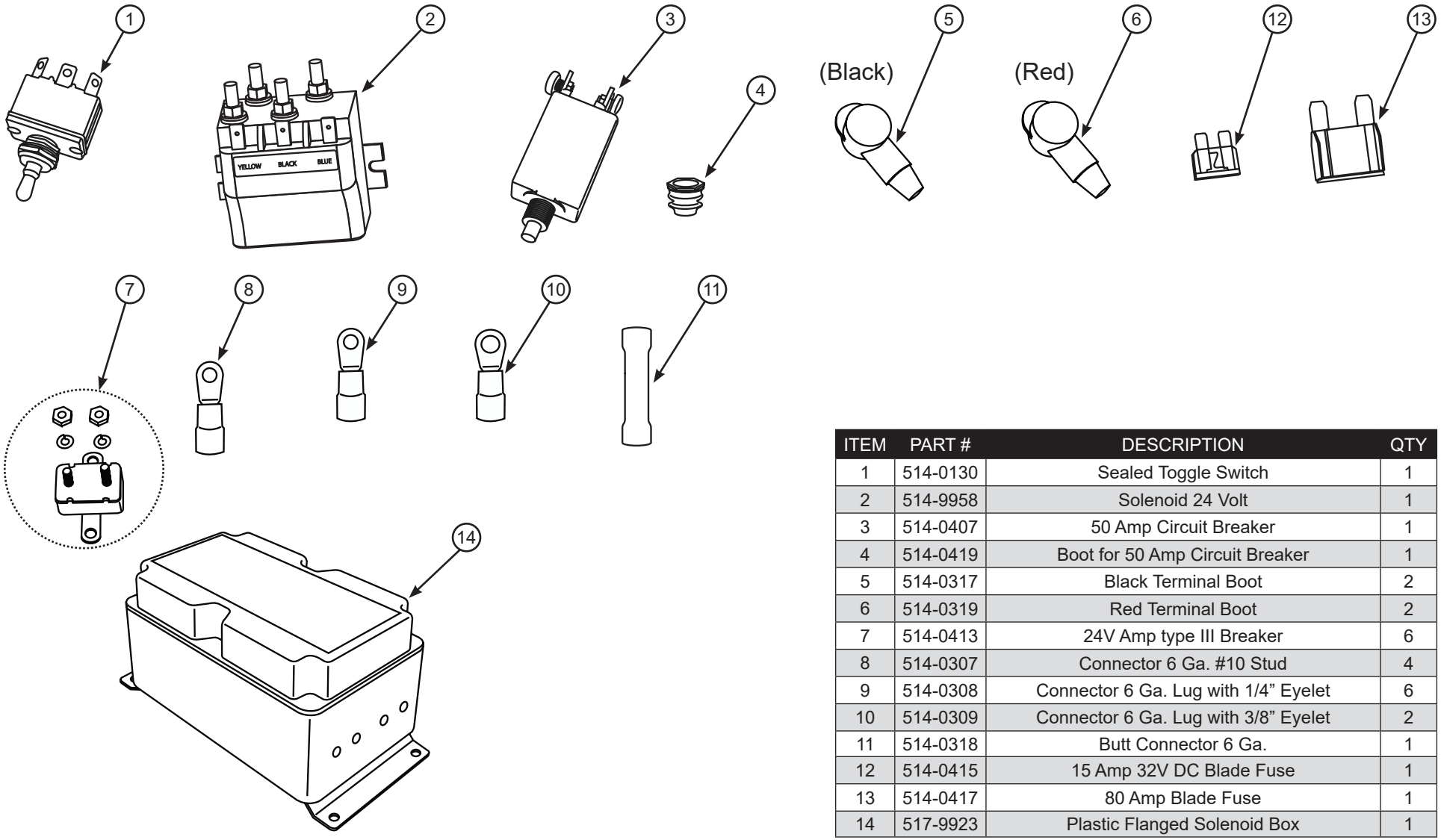

ITEM	PART #	DESCRIPTION	QTY
1	514-0130	Sealed Toggle Switch	1
2	514-9958	Solenoid 24 Volt	1
3	514-0407	50 Amp Circuit Breaker	1
4	514-0419	Boot for 50 Amp Circuit Breaker	1
5	514-0317	Black Terminal Boot	2
6	514-0319	Red Terminal Boot	2
7	514-0413	24V Amp type III Breaker	6
8	514-0307	Connector 6 Ga. #10 Stud	4
9	514-0308	Connector 6 Ga. Lug with 1/4” Eyelet	6
10	514-0309	Connector 6 Ga. Lug with 3/8” Eyelet	2
11	514-0318	Butt Connector 6 Ga.	1
12	514-0415	15 Amp 32V DC Blade Fuse	1
13	514-0417	80 Amp Blade Fuse	1
14	517-9923	Plastic Flanged Solenoid Box	1

REV. 12/19/17 WLH

Smart Switch with Cab / External Switch - 12 Volt #501-9952

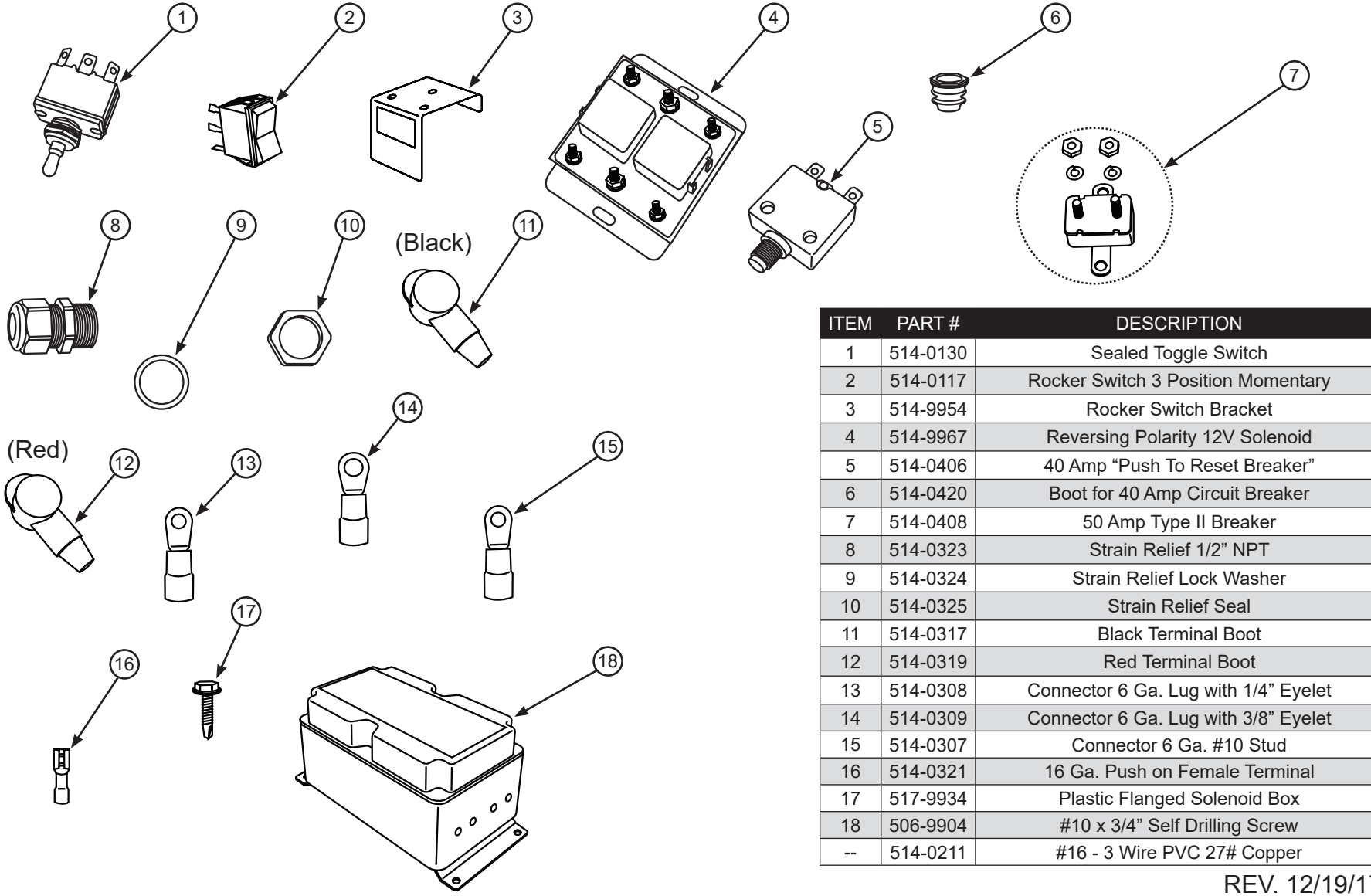

ITEM	PART #	DESCRIPTION	QTY
1	514-0130	Sealed Toggle Switch	1
2	514-0117	Rocker Switch 3 Position Momentary	1
3	514-9954	Rocker Switch Bracket	1
4	514-9967	Reversing Polarity 12V Solenoid	1
5	514-0406	40 Amp “Push To Reset Breaker”	1
6	514-0420	Boot for 40 Amp Circuit Breaker	1
7	514-0408	50 Amp Type II Breaker	1
8	514-0323	Strain Relief 1/2” NPT	1
9	514-0324	Strain Relief Lock Washer	1
10	514-0325	Strain Relief Seal	1
11	514-0317	Black Terminal Boot	2
12	514-0319	Red Terminal Boot	2
13	514-0308	Connector 6 Ga. Lug with 1/4” Eyelet	6
14	514-0309	Connector 6 Ga. Lug with 3/8” Eyelet	2
15	514-0307	Connector 6 Ga. #10 Stud	2
16	514-0321	16 Ga. Push on Female Terminal	3
17	517-9934	Plastic Flanged Solenoid Box	1
18	506-9904	#10 x 3/4” Self Drilling Screw	2
--	514-0211	#16 - 3 Wire PVC 27# Copper	25’

REV. 12/19/17 WLH

Smart Switch with External Switch - 12 Volt #501-9953

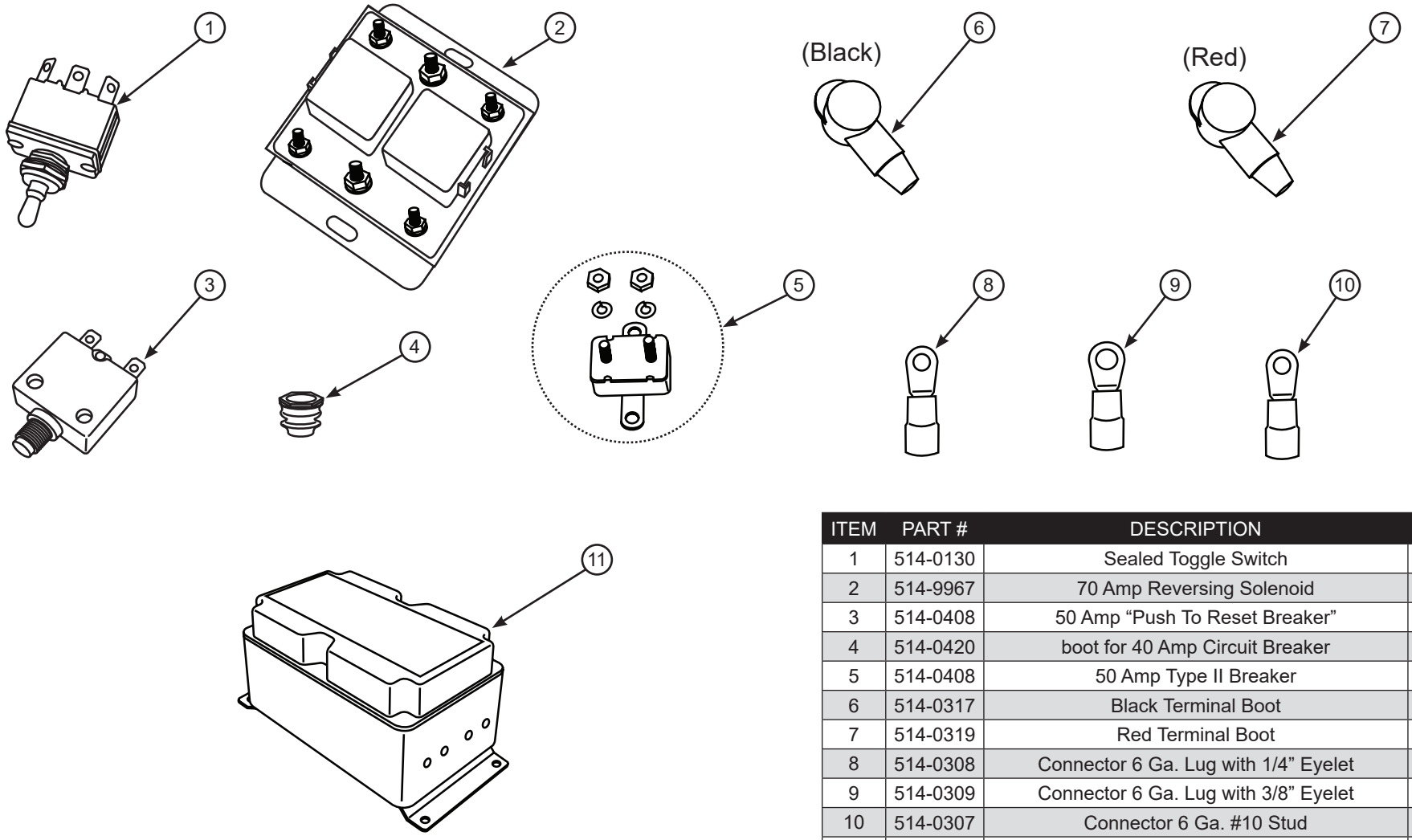

ITEM	PART #	DESCRIPTION	QTY
1	514-0130	Sealed Toggle Switch	1
2	514-9967	70 Amp Reversing Solenoid	1
3	514-0408	50 Amp “Push To Reset Breaker”	1
4	514-0420	boot for 40 Amp Circuit Breaker	1
5	514-0408	50 Amp Type II Breaker	1
6	514-0317	Black Terminal Boot	2
7	514-0319	Red Terminal Boot	2
8	514-0308	Connector 6 Ga. Lug with 1/4” Eyelet	6
9	514-0309	Connector 6 Ga. Lug with 3/8” Eyelet	2
10	514-0307	Connector 6 Ga. #10 Stud	2
11	517-9923	Plastic Flanged Solenoid Box	1

REV. 12/19/17 WLH

Smart Switch Basic Kit #514-0114

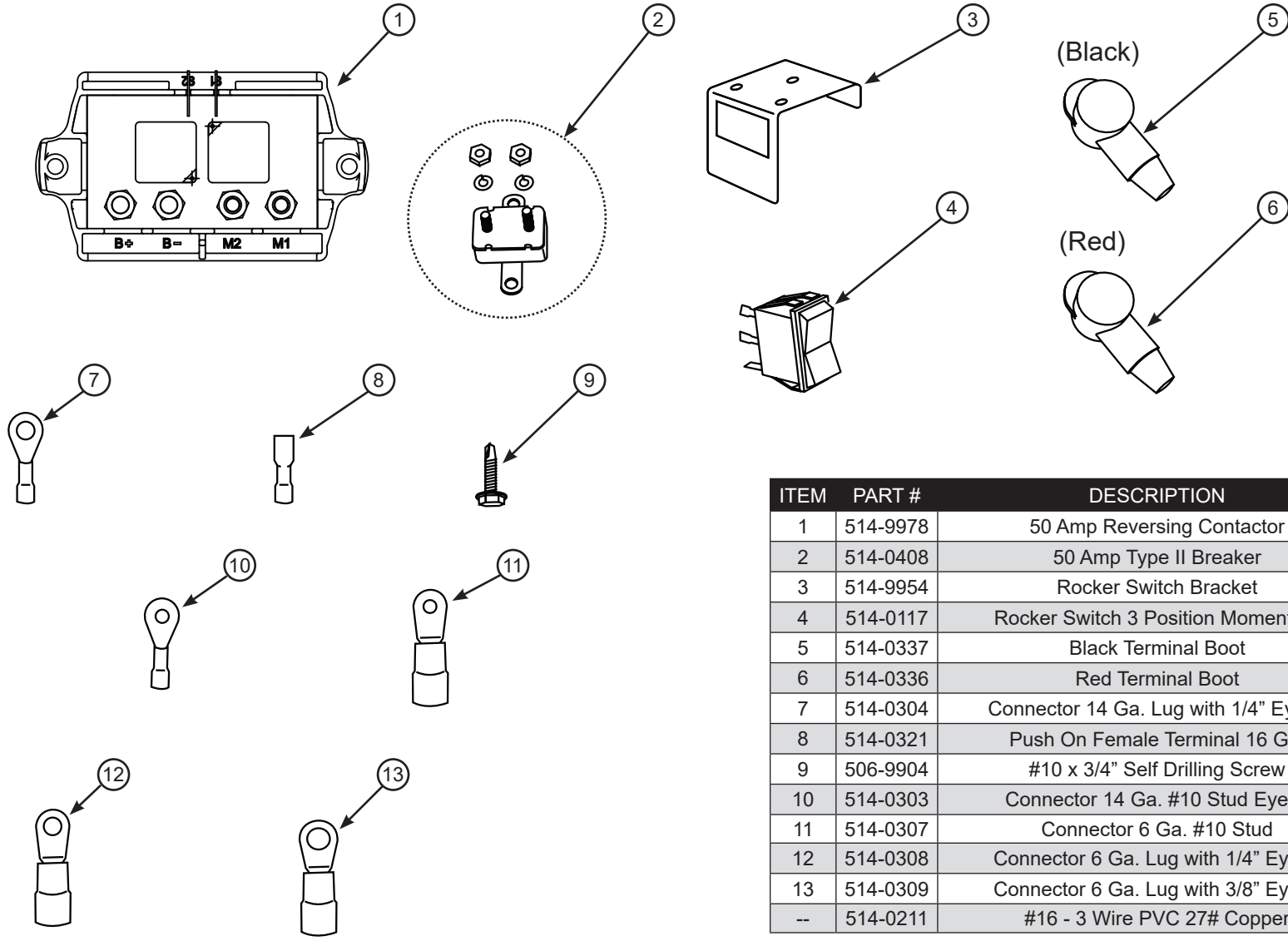

ITEM	PART #	DESCRIPTION	QTY
1	514-9978	50 Amp Reversing Contactor	1
2	514-0408	50 Amp Type II Breaker	1
3	514-9954	Rocker Switch Bracket	1
4	514-0117	Rocker Switch 3 Position Momentary	1
5	514-0337	Black Terminal Boot	2
6	514-0336	Red Terminal Boot	2
7	514-0304	Connector 14 Ga. Lug with 1/4” Eyelet	1
8	514-0321	Push On Female Terminal 16 Ga.	3
9	506-9904	#10 x 3/4” Self Drilling Screw	6
10	514-0303	Connector 14 Ga. #10 Stud Eyelet	2
11	514-0307	Connector 6 Ga. #10 Stud	2
12	514-0308	Connector 6 Ga. Lug with 1/4” Eyelet	6
13	514-0309	Connector 6 Ga. Lug with 3/8” Eyelet	2
--	514-0211	#16 - 3 Wire PVC 27# Copper	25’

REV. 04/23/19 WLH

Deluxe High Amp Switch Kit - 12 Volt #514-0139

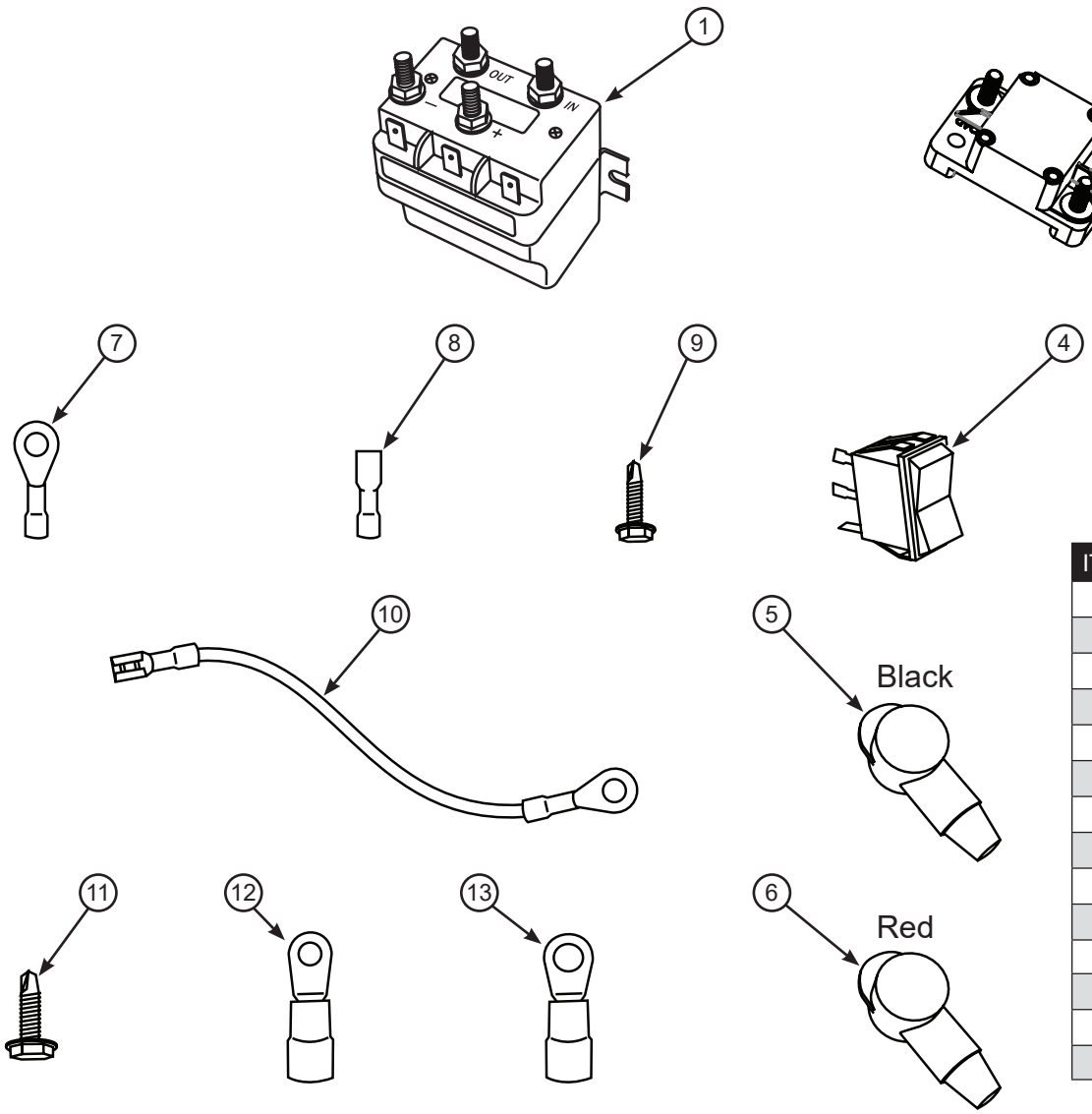

ITEM	PART #	DESCRIPTION	QTY
1	514-9996	Reversing Polarity 12V Solenoid	1
2	514-0432	50 Amp Type I Breaker	1
3	514-9954	Rocker Switch Bracket	1
4	514-0117	Rocker Switch 3 Position Momentary	1
5	514-0337	Black Terminal Boot	2
6	514-0336	Red Terminal Boot	2
7	514-0304	Connector 14 Ga. Lug with 1/4” Eyelet	1
8	514-0321	Push On Female Terminal 16 Ga.	5
9	506-9904	#10 x 3/4” Self Drilling Screw	4
10	514-9921	4” Black 10ga. Jumper Wire	1
11	506-9929	#12-14 Self Drilling TEK Screw	2
12	514-0308	Connector 6 Ga. Lug with 1/4” Eyelet	8
13	514-0309	Connector 6 Ga. Lug with 3/8” Eyelet	2
--	514-0211	#16 - 3 Wire PVC 27# Copper	25’

REV. 10/25/16 WLH